DENSEN GROUP

# Taper Bushings

**Densen Group – Olivia Hu**

Email:olivia@sydensen.com
















# CONTENS 目录


- 选型参考数据 —— 01
- SPZ系列 —— 02
- SPA系列 —— 09
- SPB系列 —— 15
- SPC系列 —— 23
- **法兰盘** —— 29
- HRC联轴器 —— 30
- **锥套** —— 31
- 安装与拆卸 —— 35

# 锥套式皮带轮

Cone sleeve type belt pulley

我们致力于将先进的传动产品推向市场,产品采用HT250材料，严格按国际标准DIN2211生产，倾心为您打造合格的产品。



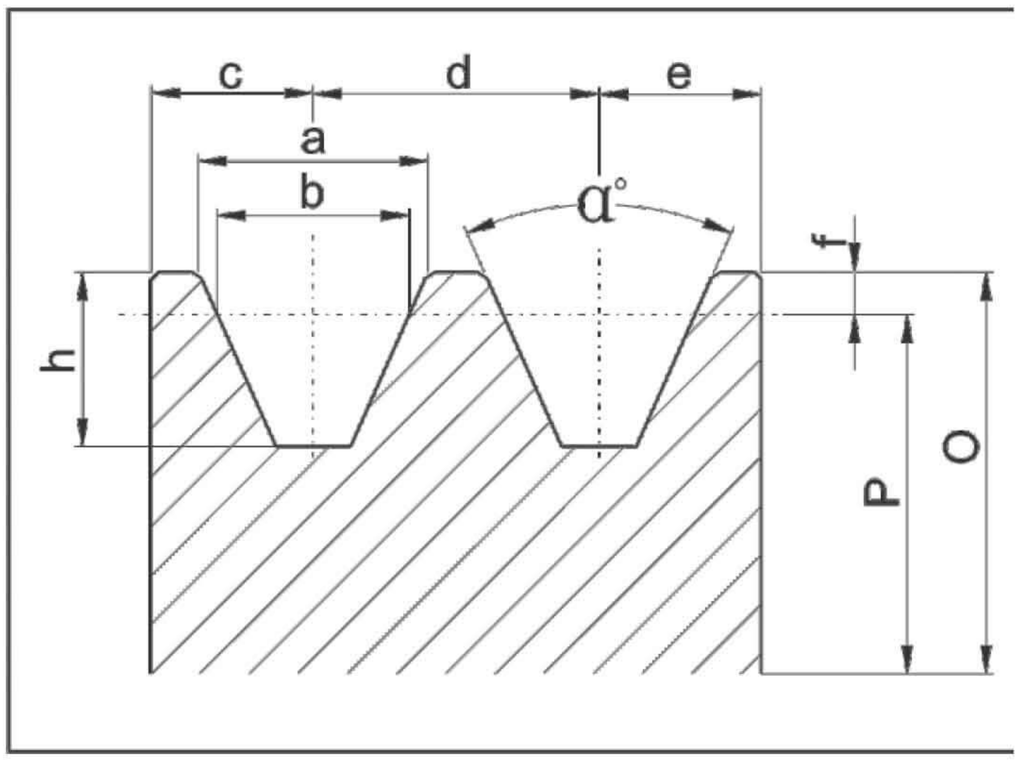


## 皮带轮尺寸 Pulley dimensions

| | | α° | | | | | | | |
|---|---|---|---|---|---|---|---|---|---|
| SPZ | ≤80 | 34 | 9.7 | 8.5 | 8 | 12 | 8 | 2 | 11 |
| | >80 | 38 | 9.9 | | | | | | |
| SPA | ≤118 | 34 | 12.7 | 11 | 10 | 15 | 10 | 2.75 | 13.7 |
| | >118 | 38 | 12.9 | | | | | | |
| SPB | ≤190 | 34 | 16.1 | 14 | 12.5 | 19 | 12.5 | 3.5 | 17.5 |
| | >190 | 38 | 16.4 | | | | | | |
| SPC | ≤315 | 34 | 21.9 | 19 | 17 | 25.5 | 17 | 4.8 | 23.8 |
| | >315 | 38 | 22.3 | | | | | | |

## V型带皮带轮型号选用图

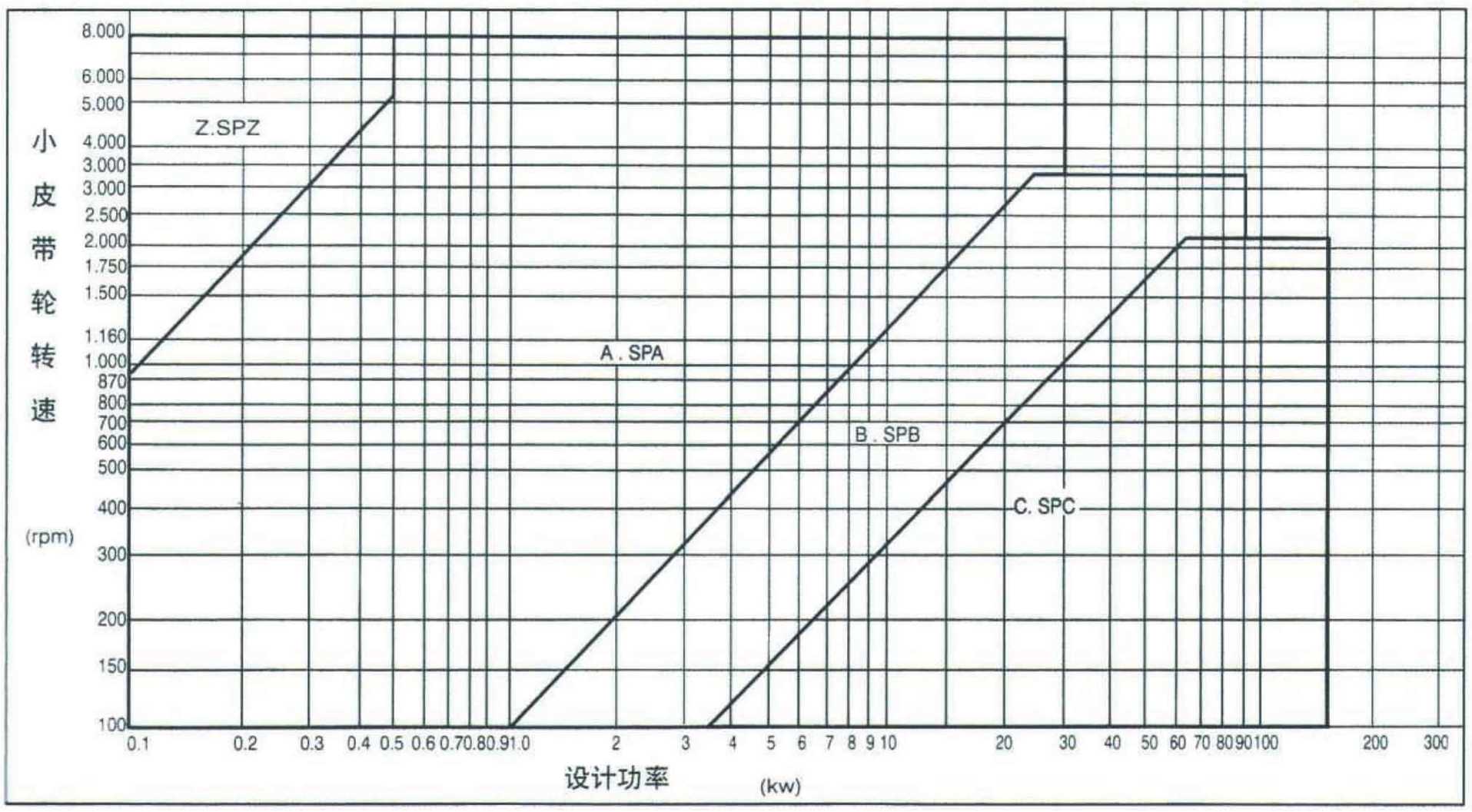

# 锥套式皮带轮
Cone sleeve type belt pulley

## SPZ-01

TYPE 1

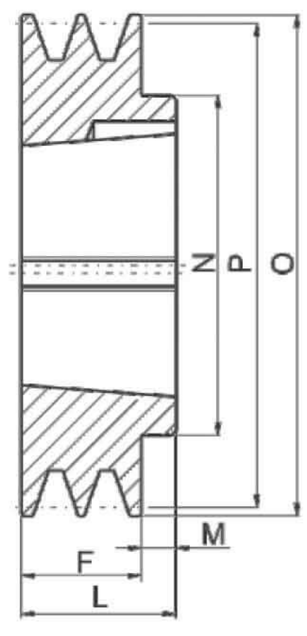


TYPE 4

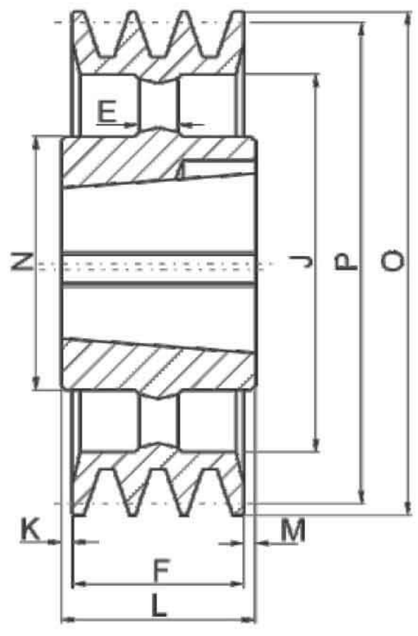


TYPE 7

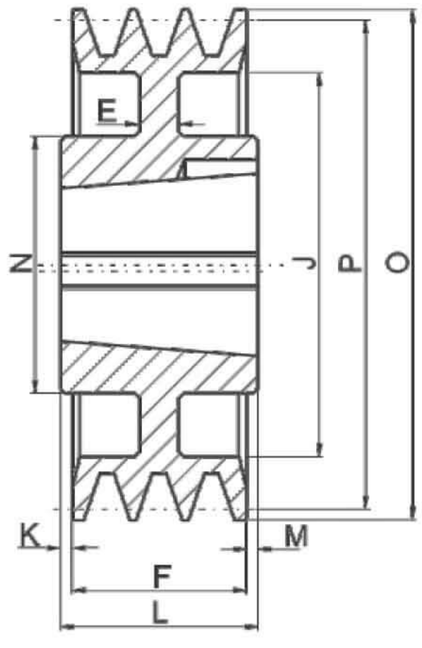


TYPE 9

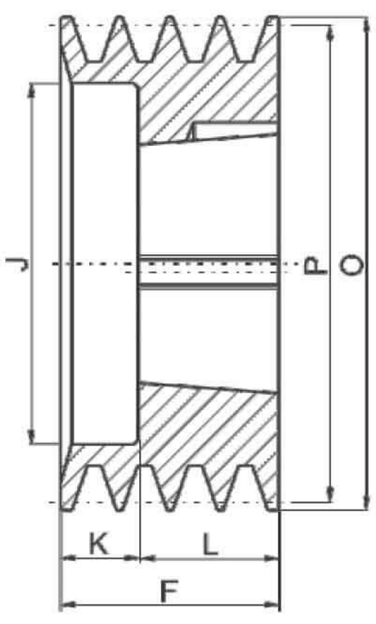


| 型号 | 槽数 | 节圆（P） | 外径（O） | 图例（Type） | 锥套 | 最大孔 | 轮板厚（E） | 轮厚（F） | 止口（J） | K | 孔长（L） | M | 小外圆直径（N） |
|---|---|---|---|---|---|---|---|---|---|---|---|---|---|
| SPZ 50-01 | 1 | 50 | 54 | 9 | 1008 | 25 | - | 37 | 26 | 15 | 22 | - | - |
| SPZ 56-01 | 1 | 56 | 60 | 9 | 1008 | 25 | - | 37 | 30 | 15 | 22 | - | - |
| SPZ 60-01 | 1 | 60 | 64 | 9 | 1008 | 25 | - | 22 | - | - | 22 | - | - |
| SPZ 63-01 | 1 | 63 | 67 | 1 | 1108 | 28 | - | 16 | - | - | 22 | 6 | 62 |
| SPZ 67-01 | 1 | 67 | 71 | 1 | 1108 | 28 | - | 16 | - | - | 22 | 6 | 62 |
| SPZ 71-01 | 1 | 71 | 75 | 1 | 1108 | 28 | - | 16 | - | - | 22 | 6 | 62 |
| SPZ 75-01 | 1 | 75 | 79 | 1 | 1108 | 28 | - | 16 | - | - | 22 | 6 | 62 |
| SPZ 80-01 | 1 | 80 | 84 | 1 | 1210 | 32 | - | 16 | - | - | 25 | 9 | 75 |
| SPZ 85-01 | 1 | 85 | 89 | 1 | 1210 | 32 | - | 16 | - | - | 25 | 9 | 75 |
| SPZ 90-01 | 1 | 90 | 94 | 1 | 1210 | 32 | - | 16 | - | - | 25 | 9 | 75 |
| SPZ 95-01 | 1 | 95 | 99 | 1 | 1210 | 32 | - | 16 | - | - | 25 | 9 | 75 |
| SPZ 100-01 | 1 | 100 | 104 | 1 | 1210 | 42 | - | 16 | - | - | 25 | 9 | 75 |
| SPZ 106-01 | 1 | 106 | 110 | 1 | 1610 | 42 | - | 16 | - | - | 25 | 9 | 80 |
| SPZ 112-01 | 1 | 112 | 116 | 1 | 1610 | 42 | - | 16 | - | - | 25 | 9 | 80 |
| SPZ 118-01 | 1 | 118 | 122 | 1 | 1610 | 42 | - | 16 | - | - | 25 | 9 | 80 |
| SPZ 125-01 | 1 | 125 | 129 | 1 | 1610 | 42 | - | 16 | - | - | 25 | 9 | 80 |
| SPZ 132-01 | 1 | 132 | 136 | 1 | 1610 | 42 | - | 16 | - | - | 25 | 9 | 80 |
| SPZ 140-01 | 1 | 140 | 144 | 7 | 1610 | 42 | 8 | 16 | 112 | - | 25 | 9 | 80 |
| SPZ 150-01 | 1 | 150 | 154 | 7 | 1610 | 42 | 8 | 16 | 122 | - | 25 | 9 | 80 |
| SPZ 160-01 | 1 | 160 | 164 | 7 | 1610 | 42 | - | 16 | 132 | - | 25 | 9 | 80 |
| SPZ 170-01 | 1 | 170 | 174 | 7 | 1610 | 42 | - | 16 | 142 | - | 25 | 9 | 80 |
| SPZ 180-01 | 1 | 180 | 184 | 7 | 1610 | 42 | - | 16 | 152 | - | 25 | 9 | 80 |
| SPZ 190-01 | 1 | 190 | 194 | 7 | 1610 | 42 | - | 16 | 162 | - | 25 | 9 | 80 |
| SPZ 200-01 | 1 | 200 | 204 | 7 | 2012 | 50 | - | 16 | 172 | - | 32 | 16 | 100 |
| SPZ 224-01 | 1 | 224 | 228 | 4 | 2012 | 50 | 15 | 16 | 196 | - | 32 | 16 | 100 |
| SPZ 250-01 | 1 | 250 | 254 | 4 | 2012 | 50 | - | 16 | 222 | 8 | 32 | 8 | 100 |
| SPZ 280-01 | 1 | 280 | 284 | 4 | 2012 | 50 | - | 16 | 252 | 8 | 32 | 8 | 100 |
| SPZ 315-01 | 1 | 315 | 319 | 4 | 2012 | 50 | - | 16 | 287 | 8 | 32 | 8 | 100 |
| SPZ 355-01 | 1 | 355 | 359 | 4 | 2012 | 50 | - | 16 | 327 | 8 | 32 | 8 | 100 |
| SPZ 400-01 | 1 | 400 | 404 | 4 | 2012 | 50 | - | 16 | 372 | 8 | 32 | 8 | 100 |
| SPZ 450-01 | 1 | 450 | 454 | 4 | 2517 | 60 | - | 16 | 422 | 14.5 | 45 | 14.5 | 120 |

# SPZ-02

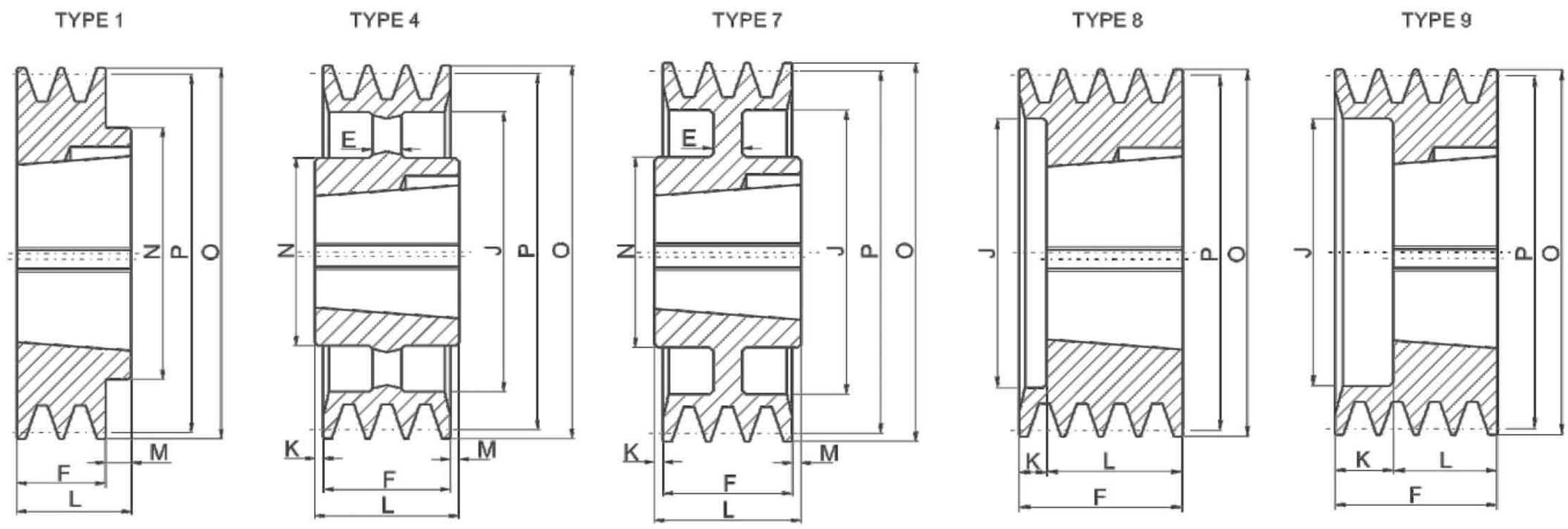


| 型 号 | 槽 数 | 节圆 (P) | 外径 (O) | 图例 (Type) | 锥 套 | 最大孔 | 轮板厚 (E) | 轮厚 (F) | 止口 (J) | K | 孔长 (L) | M | 小外圆直径 (N) |
|---|---|---|---|---|---|---|---|---|---|---|---|---|---|
| SPZ 50-02 | 2 | 50 | 54 | 9 | 1008 | 25 | - | 49 | 28 | 27 | 22 | - | - |
| SPZ 56-02 | 2 | 56 | 60 | 9 | 1108 | 28 | - | 49 | 35 | 27 | 22 | - | - |
| SPZ 60-02 | 2 | 60 | 64 | 9 | 1108 | 28 | - | 49 | 36 | 27 | 22 | - | - |
| SPZ 63-02 | 2 | 63 | 67 | 8 | 1108 | 28 | - | 28 | 40 | 6 | 22 | - | - |
| SPZ 67-02 | 2 | 67 | 71 | 8 | 1108 | 28 | - | 28 | 42 | 6 | 22 | - | - |
| SPZ 71-02 | 2 | 71 | 75 | 8 | 1108 | 28 | - | 28 | 43 | 6 | 22 | - | - |
| SPZ 75-02 | 2 | 75 | 79 | 8 | 1210 | 32 | - | 28 | 51 | 3 | 25 | - | - |
| SPZ 80-02 | 2 | 80 | 84 | 8 | 1210 | 32 | - | 28 | 52 | 3 | 25 | - | - |
| SPZ 85-02 | 2 | 85 | 89 | 8 | 1610 | 42 | - | 28 | 60 | 3 | 25 | - | - |
| SPZ 90-02 | 2 | 90 | 94 | 8 | 1610 | 42 | - | 28 | 62 | 3 | 25 | - | - |
| SPZ 95-02 | 2 | 95 | 99 | 8 | 1610 | 42 | - | 28 | 67 | 3 | 25 | - | - |
| SPZ 100-02 | 2 | 100 | 104 | 8 | 1610 | 42 | - | 28 | 72 | 3 | 25 | - | - |
| SPZ 106-02 | 2 | 106 | 110 | 8 | 1610 | 42 | - | 28 | 78 | 3 | 25 | - | - |
| SPZ 112-02 | 2 | 112 | 116 | 8 | 1610 | 42 | - | 28 | 84 | 3 | 25 | - | - |
| SPZ 118-02 | 2 | 118 | 122 | 8 | 1610 | 42 | - | 28 | 90 | 3 | 25 | - | - |
| SPZ 125-02 | 2 | 125 | 129 | 8 | 1610 | 42 | - | 28 | 97 | 3 | 25 | - | - |
| SPZ 132-02 | 2 | 132 | 136 | 8 | 1610 | 42 | - | 28 | 104 | 3 | 25 | - | - |
| SPZ 140-02 | 2 | 140 | 144 | 6 | 1610 | 42 | - | 28 | 112 | 3 | 25 | - | 80 |
| SPZ 150-02 | 2 | 150 | 154 | 1 | 2012 | 50 | - | 28 | - | - | 32 | 4 | 100 |
| SPZ 160-02 | 2 | 160 | 164 | 7 | 2012 | 50 | - | 28 | 132 | - | 32 | 4 | 100 |
| SPZ 170-02 | 2 | 170 | 174 | 7 | 2012 | 50 | - | 28 | 142 | - | 32 | 4 | 100 |
| SPZ 180-02 | 2 | 180 | 184 | 7 | 2012 | 50 | 10 | 28 | 152 | - | 32 | 4 | 100 |
| SPZ 190-02 | 2 | 190 | 194 | 7 | 2012 | 50 | 10 | 28 | 162 | - | 32 | 4 | 100 |
| SPZ 200-02 | 2 | 200 | 204 | 7 | 2012 | 50 | 10 | 28 | 172 | - | 32 | 4 | 100 |
| SPZ 224-02 | 2 | 224 | 228 | 7 | 2012 | 50 | 10 | 28 | 196 | - | 32 | 4 | 100 |
| SPZ 250-02 | 2 | 250 | 254 | 4 | 2012 | 50 | - | 28 | 222 | 2 | 32 | 2 | 100 |
| SPZ 280-02 | 2 | 280 | 284 | 4 | 2012 | 50 | - | 28 | 252 | 2 | 32 | 2 | 100 |
| SPZ 315-02 | 2 | 315 | 319 | 4 | 2012 | 50 | - | 28 | 287 | 2 | 32 | 2 | 100 |
| SPZ 355-02 | 2 | 355 | 359 | 4 | 2012 | 50 | - | 28 | 327 | 2 | 32 | 2 | 110 |
| SPZ 400-02 | 2 | 400 | 404 | 4 | 2517 | 60 | - | 28 | 372 | 8.5 | 45 | 8.5 | 120 |
| SPZ 450-02 | 2 | 450 | 454 | 4 | 2517 | 60 | - | 28 | 422 | 8.5 | 45 | 8.5 | 120 |

# 锥套式皮带轮
Cone sleeve type belt pulley

# SPZ-03

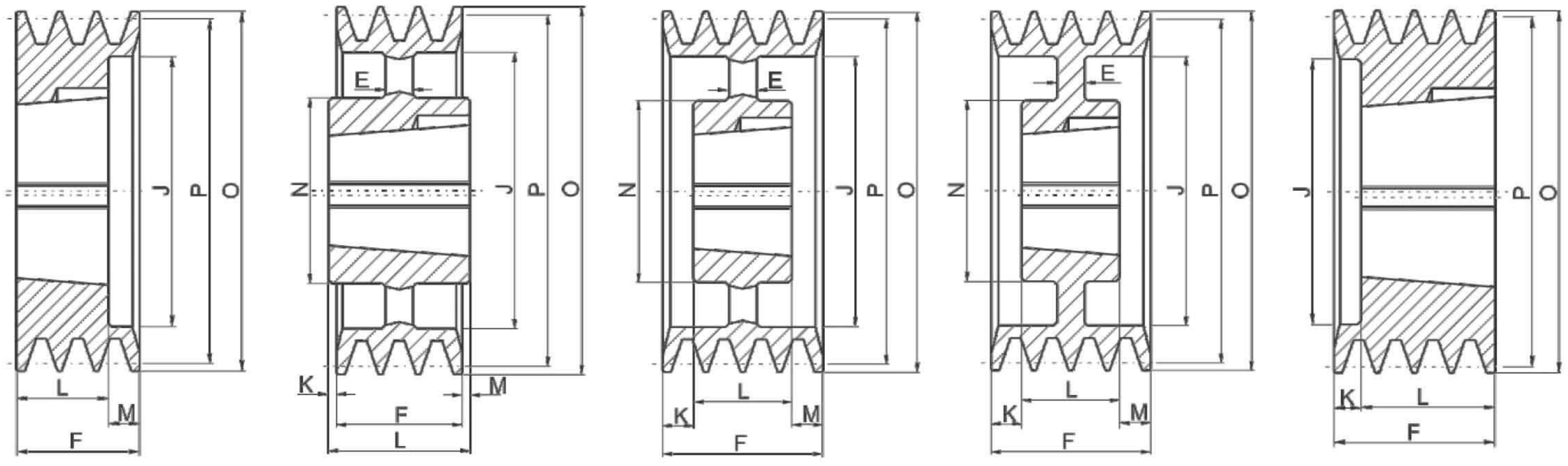


| 型 号 | 槽 数 | 节圆（P） | 外径（O） | 图例（Type） | 锥 套 | 最大孔 | 轮板厚（E） | 轮厚（F） | 止口（J） | K | 孔长（L） | M | 小外圆直径（N） |
|---|---|---|---|---|---|---|---|---|---|---|---|---|---|
| SPZ 63-03 | 3 | 63 | 67 | 8 | 1108 | 28 | - | 40 | 40 | 18 | 22 | - | - |
| SPZ 67-03 | 3 | 67 | 71 | 8 | 1108 | 28 | - | 40 | 42 | 18 | 22 | - | - |
| SPZ 71-03 | 3 | 71 | 75 | 8 | 1108 | 28 | - | 40 | 43 | 18 | 22 | - | - |
| SPZ 75-03 | 3 | 75 | 79 | 8 | 1210 | 32 | - | 40 | 48 | 15 | 25 | - | - |
| SPZ 80-03 | 3 | 80 | 84 | 8 | 1210 | 32 | - | 40 | 52 | 15 | 25 | - | - |
| SPZ 85-03 | 3 | 85 | 89 | 8 | 1610 | 42 | - | 40 | 60 | 15 | 25 | - | - |
| SPZ 90-03 | 3 | 90 | 94 | 8 | 1610 | 42 | - | 40 | 62 | 15 | 25 | - | - |
| SPZ 95-03 | 3 | 95 | 99 | 8 | 1610 | 42 | - | 40 | 67 | 15 | 25 | - | - |
| SPZ 100-03 | 3 | 100 | 104 | 8 | 1610 | 42 | - | 40 | 72 | 15 | 25 | - | - |
| SPZ 106-03 | 3 | 106 | 110 | 8 | 1610 | 42 | - | 40 | 78 | 15 | 25 | - | - |
| SPZ 112-03 | 3 | 112 | 116 | 8 | 2012 | 50 | - | 40 | 84 | 8 | 32 | - | - |
| SPZ 118-03 | 3 | 118 | 122 | 8 | 2012 | 50 | - | 40 | 92 | 8 | 32 | - | - |
| SPZ 125-03 | 3 | 125 | 129 | 2 | 2012 | 50 | - | 40 | 97 | - | 32 | 8 | - |
| SPZ 132-03 | 3 | 132 | 136 | 2 | 2012 | 50 | - | 40 | 104 | - | 32 | 8 | - |
| SPZ 140-03 | 3 | 140 | 144 | 2 | 2012 | 50 | - | 40 | 112 | - | 32 | 8 | - |
| SPZ 150-03 | 3 | 150 | 154 | 2 | 2012 | 50 | - | 40 | 122 | - | 32 | 8 | - |
| SPZ 160-03 | 3 | 160 | 164 | 2 | 2012 | 50 | - | 40 | 132 | - | 32 | 8 | - |
| SPZ 170-03 | 3 | 170 | 174 | 6 | 2012 | 50 | - | 40 | 142 | - | 32 | 8 | - |
| SPZ 180-03 | 3 | 180 | 184 | 6 | 2012 | 50 | - | 40 | 152 | - | 32 | 8 | - |
| SPZ 190-03 | 3 | 190 | 194 | 6 | 2012 | 50 | 20 | 40 | 162 | 4 | 32 | 4 | 100 |
| SPZ 200-03 | 3 | 200 | 204 | 6 | 2012 | 50 | 20 | 40 | 172 | 4 | 32 | 4 | 100 |
| SPZ 224-03 | 3 | 224 | 228 | 5 | 2012 | 50 | 20 | 40 | 196 | 4 | 32 | 4 | 100 |
| SPZ 250-03 | 3 | 250 | 254 | 5 | 2012 | 50 | - | 40 | 222 | 4 | 32 | 4 | 100 |
| SPZ 280-03 | 3 | 280 | 284 | 4 | 2517 | 60 | - | 40 | 252 | 2.5 | 45 | 2.5 | 120 |
| SPZ 315-03 | 3 | 315 | 319 | 4 | 2517 | 60 | - | 40 | 287 | 2.5 | 45 | 2.5 | 120 |
| SPZ 355-03 | 3 | 355 | 359 | 4 | 2517 | 60 | - | 40 | 327 | 2.5 | 45 | 2.5 | 120 |
| SPZ 400-03 | 3 | 400 | 404 | 4 | 2517 | 60 | - | 40 | 372 | 2.5 | 45 | 2.5 | 120 |
| SPZ 450-03 | 3 | 450 | 454 | 4 | 2517 | 60 | - | 40 | 422 | 2.5 | 45 | 2.5 | 120 |
| SPZ 500-03 | 3 | 500 | 504 | 4 | 2517 | 60 | - | 40 | 472 | 2.5 | 45 | 2.5 | 120 |
| SPZ 630-03 | 3 | 630 | 634 | 4 | 2517 | 60 | - | 40 | 602 | 2.5 | 45 | 2.5 | 120 |
| SPZ 800-03 | 3 | 800 | 804 | 4 | 3020 | 75 | - | 40 | 772 | 5.5 | 51 | 5.5 | 145 |

# SPZ-04

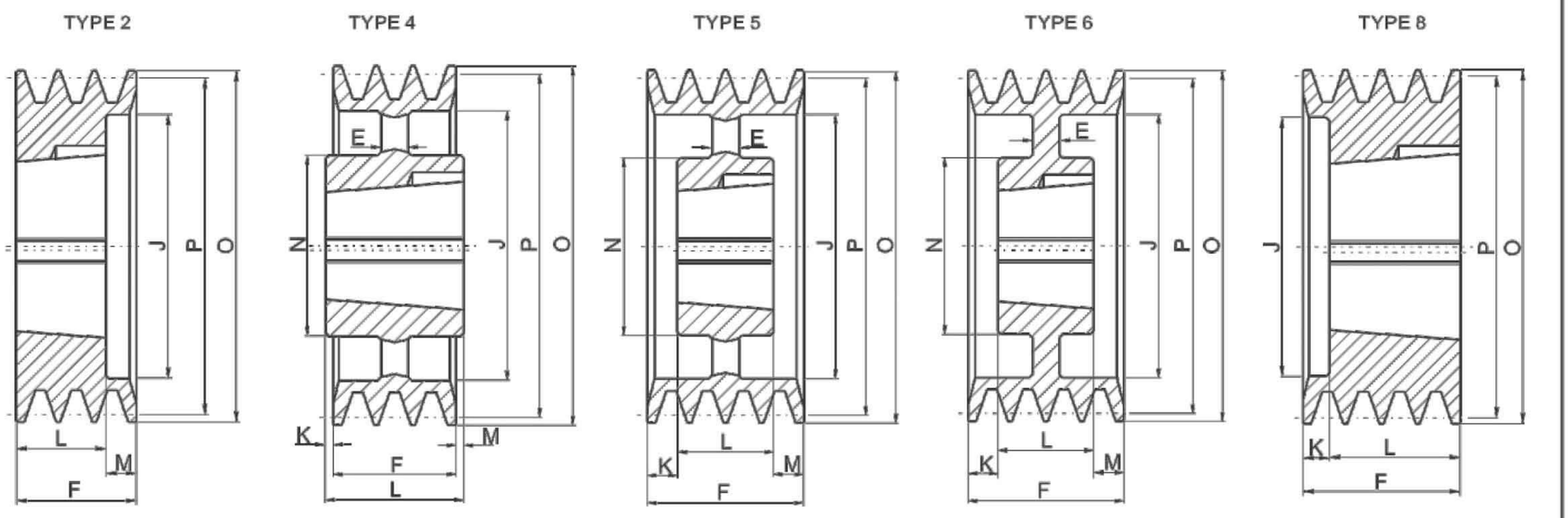


| 型 号 | 槽 数 | 节圆 (P) | 外径 (O) | 图例 (Type) | 锥 套 | 最大孔 | 轮板厚 (E) | 轮厚 (F) | 止口 (J) | K | 孔长 (L) | M | 小外圆直径 (N) |
|---|---|---|---|---|---|---|---|---|---|---|---|---|---|
| SPZ 80-04 | 4 | 80 | 84 | 8 | 1210 | 32 | - | 52 | 52 | 27 | 25 | - | - |
| SPZ 85-04 | 4 | 85 | 89 | 8 | 1610 | 42 | - | 52 | 60 | 27 | 25 | - | - |
| SPZ 90-04 | 4 | 90 | 94 | 8 | 1610 | 42 | - | 52 | 62 | 27 | 25 | - | - |
| SPZ 95-04 | 4 | 95 | 99 | 8 | 1610 | 42 | - | 52 | 67 | 27 | 25 | - | - |
| SPZ 100-04 | 4 | 100 | 104 | 8 | 1610 | 42 | - | 52 | 72 | 27 | 25 | - | - |
| SPZ 106-04 | 4 | 106 | 110 | 8 | 1610 | 42 | - | 52 | 80 | 27 | 25 | - | - |
| SPZ 112-04 | 4 | 112 | 116 | 8 | 2012 | 50 | - | 52 | 86 | 20 | 32 | - | - |
| SPZ 118-04 | 4 | 118 | 122 | 8 | 2012 | 50 | - | 52 | 92 | 20 | 32 | - | - |
| SPZ 125-04 | 4 | 125 | 129 | 2 | 2012 | 50 | - | 52 | 99 | - | 32 | 20 | - |
| SPZ 132-04 | 4 | 132 | 136 | 2 | 2012 | 50 | - | 52 | 104 | - | 32 | 20 | - |
| SPZ 140-04 | 4 | 140 | 144 | 2 | 2012 | 50 | - | 52 | 112 | - | 32 | 20 | - |
| SPZ 150-04 | 4 | 150 | 154 | 2 | 2517 | 60 | - | 52 | 122 | - | 45 | 7 | - |
| SPZ 160-04 | 4 | 160 | 164 | 2 | 2517 | 60 | - | 52 | 132 | - | 45 | 7 | - |
| SPZ 170-04 | 4 | 170 | 174 | 2 | 2517 | 60 | - | 52 | 142 | - | 45 | 7 | - |
| SPZ 180-04 | 4 | 180 | 184 | 6 | 2517 | 60 | - | 52 | 152 | - | 45 | 7 | - |
| SPZ 190-04 | 4 | 190 | 194 | 6 | 2517 | 60 | 10 | 52 | 162 | 3.5 | 45 | 3.5 | 120 |
| SPZ 200-04 | 4 | 200 | 204 | 6 | 2517 | 60 | 10 | 52 | 172 | 3.5 | 45 | 3.5 | 120 |
| SPZ 224-04 | 4 | 224 | 228 | 5 | 2517 | 60 | 10 | 52 | 196 | 3.5 | 45 | 3.5 | 120 |
| SPZ 250-04 | 4 | 250 | 254 | 5 | 2517 | 60 | - | 52 | 222 | 3.5 | 45 | 3.5 | 120 |
| SPZ 280-04 | 4 | 280 | 284 | 5 | 2517 | 60 | - | 52 | 252 | 3.5 | 45 | 3.5 | 120 |
| SPZ 315-04 | 4 | 315 | 319 | 5 | 2517 | 60 | - | 52 | 287 | 3.5 | 45 | 3.5 | 120 |
| SPZ 355-04 | 4 | 355 | 359 | 5 | 2517 | 60 | - | 52 | 327 | 3.5 | 45 | 3.5 | 120 |
| SPZ 400-04 | 4 | 400 | 404 | 5 | 2517 | 60 | - | 52 | 372 | 3.5 | 45 | 3.5 | 120 |
| SPZ 450-04 | 4 | 450 | 454 | 5 | 3020 | 75 | - | 52 | 422 | 0.5 | 51 | 0.5 | 145 |
| SPZ 500-04 | 4 | 500 | 504 | 5 | 3020 | 75 | - | 52 | 472 | 0.5 | 51 | 0.5 | 145 |
| SPZ 630-04 | 4 | 630 | 634 | 4 | 3030 | 75 | - | 52 | 602 | 12 | 76 | 12 | 145 |
| SPZ 800-04 | 4 | 800 | 804 | 4 | 3030 | 75 | - | 52 | 772 | 12 | 76 | 12 | 145 |

# 锥套式皮带轮

Cone sleeve type belt pulley

# SPZ-05

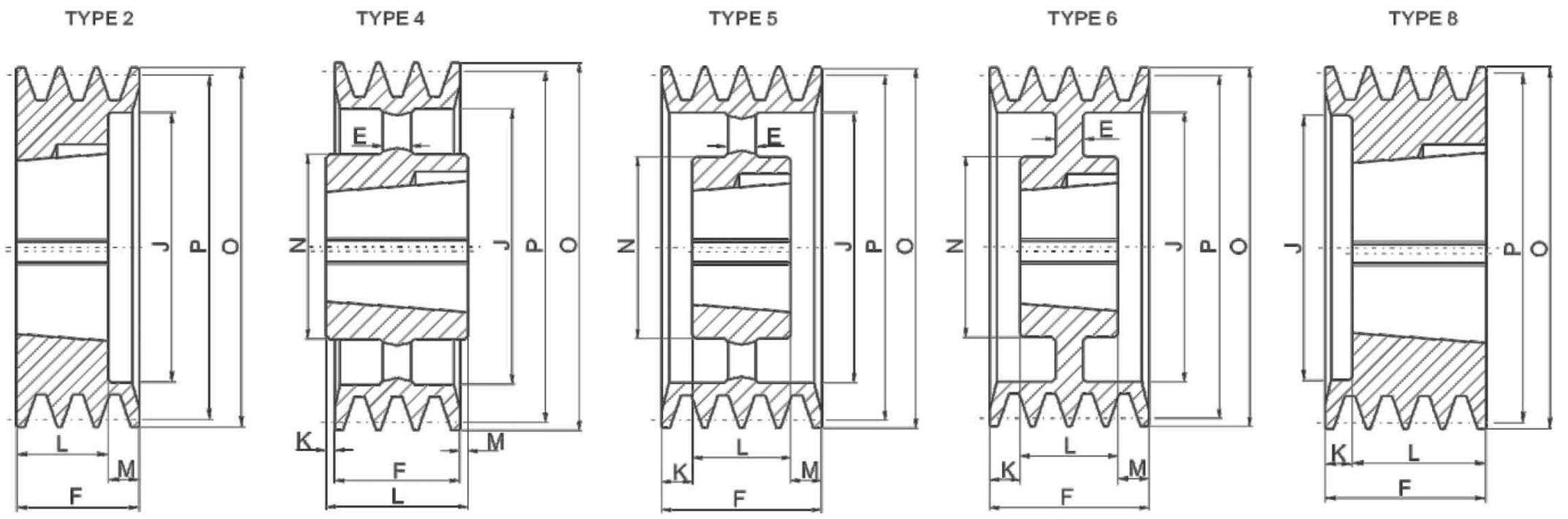


| 型 号 | 槽 数 | 节圆（P） | 外径（O） | 图例（Type） | 锥 套 | 最大孔 | 轮板厚（E） | 轮厚（F） | 止口（J） | K | 孔长（L） | M | 小外圆直径（N） |
|---|---|---|---|---|---|---|---|---|---|---|---|---|---|
| SPZ 85-05 | 5 | 85 | 89 | 8 | 1610 | 42 | – | 64 | 60 | 39 | 25 | – | – |
| SPZ 90-05 | 5 | 90 | 94 | 8 | 1610 | 42 | – | 64 | 62 | 39 | 25 | – | – |
| SPZ 95-05 | 5 | 95 | 99 | 8 | 1610 | 42 | – | 64 | 67 | 39 | 25 | – | – |
| SPZ 100-05 | 5 | 100 | 104 | 8 | 2012 | 50 | – | 64 | 72 | 32 | 32 | – | – |
| SPZ 106-05 | 5 | 106 | 110 | 8 | 2012 | 50 | – | 64 | 78 | 32 | 32 | – | – |
| SPZ 112-05 | 5 | 112 | 116 | 8 | 2012 | 50 | – | 64 | 84 | 32 | 32 | – | – |
| SPZ 118-05 | 5 | 118 | 122 | 8 | 2012 | 50 | – | 64 | 90 | 32 | 32 | – | – |
| SPZ 125-05 | 5 | 125 | 129 | 8 | 2012 | 50 | – | 64 | 97 | 32 | 32 | – | – |
| SPZ 132-05 | 5 | 132 | 136 | 8 | 2517 | 60 | – | 64 | 104 | 19 | 45 | – | – |
| SPZ 140-05 | 5 | 140 | 144 | 2 | 2517 | 60 | – | 64 | 112 | – | 45 | 19 | – |
| SPZ 150-05 | 5 | 150 | 154 | 2 | 2517 | 60 | – | 64 | 122 | – | 45 | 19 | – |
| SPZ 160-05 | 5 | 160 | 164 | 2 | 2517 | 60 | – | 64 | 132 | – | 45 | 19 | – |
| SPZ 170-05 | 5 | 170 | 174 | 6 | 2517 | 60 | – | 64 | 142 | – | 45 | 19 | – |
| SPZ 180-05 | 5 | 180 | 184 | 6 | 2517 | 60 | – | 64 | 152 | – | 45 | 19 | – |
| SPZ 190-05 | 5 | 190 | 194 | 6 | 2517 | 60 | 10 | 64 | 162 | 9.5 | 45 | 9.5 | 120 |
| SPZ 200-05 | 5 | 200 | 204 | 6 | 2517 | 60 | 10 | 64 | 172 | 9.5 | 45 | 9.5 | 120 |
| SPZ 224-05 | 5 | 224 | 228 | 6 | 2517 | 60 | 10 | 64 | 196 | 9.5 | 45 | 9.5 | 120 |
| SPZ 250-05 | 5 | 250 | 254 | 5 | 2517 | 60 | – | 64 | 222 | 9.5 | 45 | 9.5 | 120 |
| SPZ 280-05 | 5 | 280 | 284 | 5 | 2517 | 60 | – | 64 | 252 | 9.5 | 45 | 9.5 | 120 |
| SPZ 315-05 | 5 | 315 | 319 | 5 | 2517 | 60 | – | 64 | 287 | 9.5 | 45 | 9.5 | 120 |
| SPZ 355-05 | 5 | 355 | 359 | 5 | 2517 | 60 | – | 64 | 327 | 9.5 | 45 | 9.5 | 120 |
| SPZ 400-05 | 5 | 400 | 404 | 5 | 3020 | 75 | – | 64 | 372 | 6.5 | 51 | 6.5 | 145 |
| SPZ 450-05 | 5 | 450 | 454 | 5 | 3020 | 75 | – | 64 | 422 | 6.5 | 51 | 6.5 | 145 |
| SPZ 500-05 | 5 | 500 | 504 | 5 | 3020 | 75 | – | 64 | 472 | 6.5 | 51 | 6.5 | 145 |
| SPZ 630-05 | 5 | 630 | 634 | 4 | 3030 | 75 | – | 64 | 602 | 6 | 76 | 6 | 145 |
| SPZ 800-05 | 5 | 800 | 804 | 4 | 3535 | 90 | – | 64 | 772 | 12.5 | 89 | 12.5 | 170 |

# SPZ-06

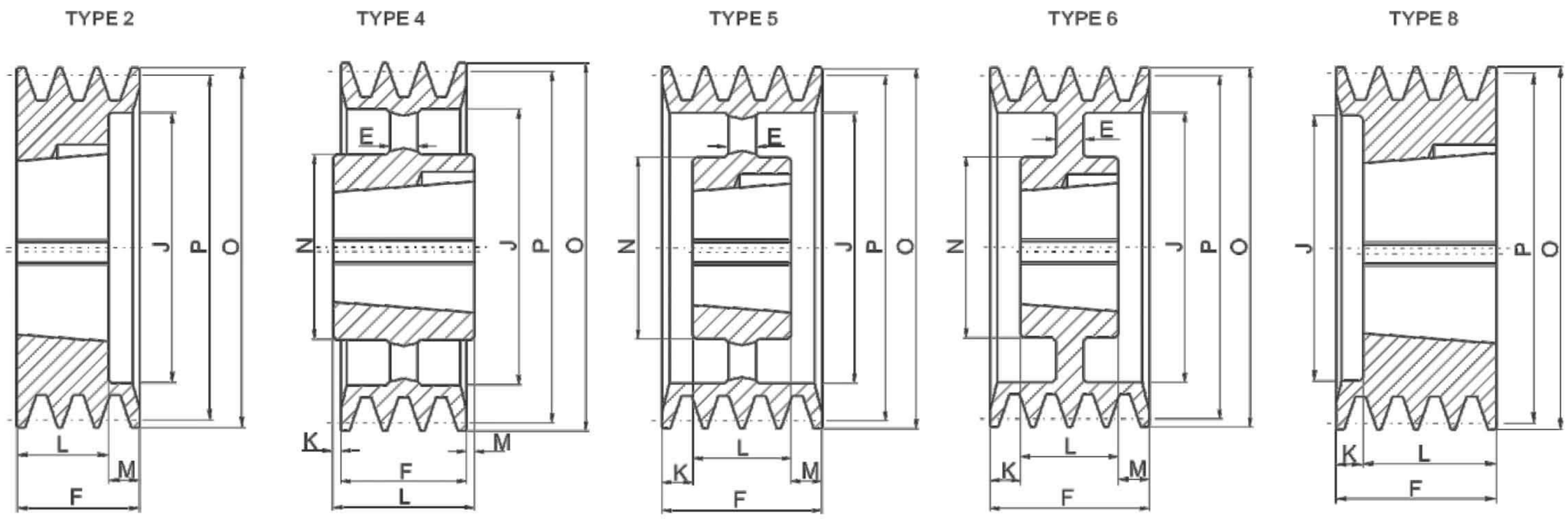


| 型号 | 槽数 | 节圆 (P) | 外径 (O) | 图例 (Type) | 锥套 | 最大孔 | 轮板厚 (E) | 轮厚 (F) | 止口 (J) | K | 孔长 (L) | M | 小外圆直径 (N) |
|---|---|---|---|---|---|---|---|---|---|---|---|---|---|
| SPZ 90-06 | 6 | 90 | 94 | 8 | 1610 | 42 | – | 76 | 62 | 51 | 25 | – | – |
| SPZ 95-06 | 6 | 95 | 99 | 8 | 1610 | 42 | – | 76 | 67 | 51 | 25 | – | – |
| SPZ 100-06 | 6 | 100 | 104 | 8 | 2012 | 50 | – | 76 | 72 | 44 | 32 | – | – |
| SPZ 106-06 | 6 | 106 | 110 | 8 | 2012 | 50 | – | 76 | 78 | 44 | 32 | – | – |
| SPZ 112-06 | 6 | 112 | 116 | 8 | 2012 | 50 | – | 76 | 84 | 44 | 32 | – | – |
| SPZ 118-06 | 6 | 118 | 122 | 8 | 2517 | 60 | – | 76 | 90 | 31 | 45 | – | – |
| SPZ 125-06 | 6 | 125 | 129 | 8 | 2517 | 60 | – | 76 | 97 | 31 | 45 | – | – |
| SPZ 132-06 | 6 | 132 | 136 | 8 | 2517 | 60 | – | 76 | 104 | 31 | 45 | – | – |
| SPZ 140-06 | 6 | 140 | 144 | 2 | 2517 | 60 | – | 76 | 12 | – | 45 | 31 | – |
| SPZ 150-06 | 6 | 150 | 154 | 2 | 2517 | 60 | – | 76 | 12 | – | 45 | 31 | – |
| SPZ 160-06 | 6 | 160 | 164 | 2 | 2517 | 60 | – | 76 | 132 | – | 45 | 31 | – |
| SPZ 170-06 | 6 | 170 | 174 | 2 | 2517 | 60 | – | 76 | 142 | – | 45 | 31 | – |
| SPZ 180-06 | 6 | 180 | 184 | 6 | 2517 | 60 | – | 76 | 152 | – | 45 | 31 | – |
| SPZ 190-06 | 6 | 190 | 194 | 6 | 2517 | 60 | 10 | 76 | 162 | 15.5 | 45 | 15.5 | 120 |
| SPZ 200-06 | 6 | 200 | 204 | 6 | 2517 | 60 | 10 | 76 | 172 | 15.5 | 45 | 15.5 | 120 |
| SPZ 224-06 | 6 | 224 | 228 | 6 | 2517 | 60 | 10 | 76 | 196 | 15.5 | 45 | 15.5 | 120 |
| SPZ 250-06 | 6 | 250 | 254 | 6 | 2517 | 60 | – | 76 | 22 | 15.5 | 45 | 15.5 | 120 |
| SPZ 280-06 | 6 | 280 | 284 | 5 | 2517 | 60 | – | 76 | 252 | 15.5 | 45 | 15.5 | 120 |
| SPZ 315-06 | 6 | 315 | 319 | 5 | 2517 | 60 | – | 76 | 287 | 15.5 | 45 | 15.5 | 120 |
| SPZ 355-06 | 6 | 355 | 359 | 5 | 2517 | 60 | – | 76 | 327 | 15.5 | 45 | 15.5 | 120 |
| SPZ 400-06 | 6 | 400 | 404 | 5 | 3030 | 75 | – | 76 | 372 | – | 76 | – | 145 |
| SPZ 450-06 | 6 | 450 | 454 | 5 | 3030 | 75 | – | 76 | 42 | – | 76 | – | 145 |
| SPZ 500-06 | 6 | 500 | 504 | 5 | 3030 | 75 | – | 76 | 472 | – | 76 | – | 145 |
| SPZ 630-06 | 6 | 630 | 634 | 4 | 3535 | 90 | – | 76 | 602 | 6.5 | 89 | 6.5 | 170 |
| SPZ 800-06 | 6 | 800 | 804 | 4 | 3535 | 90 | – | 76 | 72 | 6.5 | 89 | 6.5 | 170 |

# 锥套式皮带轮

Cone sleeve type belt pulley

## SPZ-08

TYPE 3

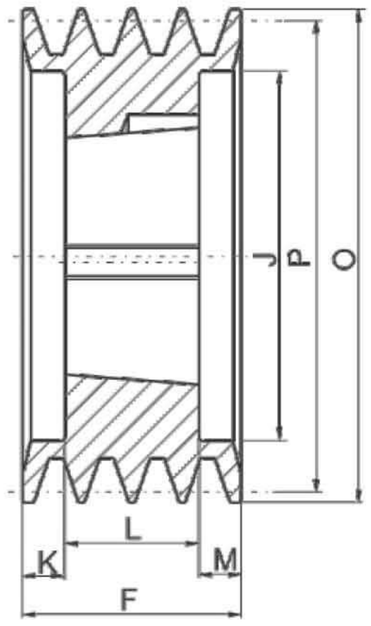


TYPE 5

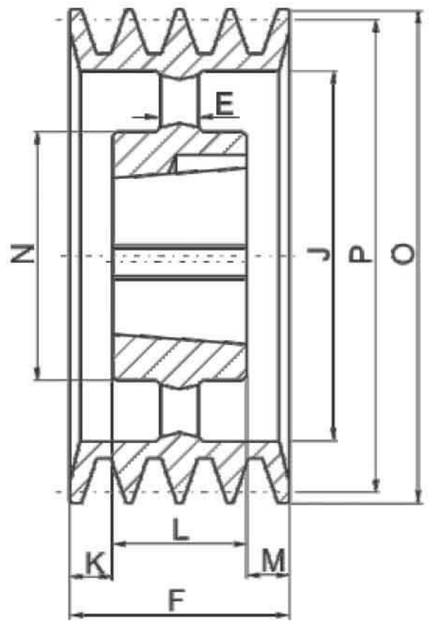


TYPE 6

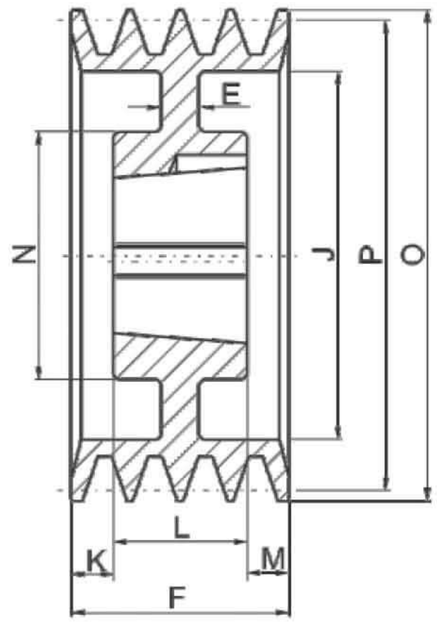


| 型 号 | 槽 数 | 节圆（P） | 外径（O） | 图例（Type） | 锥 套 | 最大孔 | 轮板厚（E） | 轮厚（F） | 止口（J） | K | 孔长（L） | M | 小外圆直径 (N) |
|---|---|---|---|---|---|---|---|---|---|---|---|---|---|
| SPZ 140-08 | 8 | 140 | 144 | 3 | 2517 | 60 | - | 100 | 112 | 27.5 | 45 | 27.5 | - |
| SPZ 150-08 | 8 | 150 | 154 | 3 | 2517 | 60 | - | 100 | 122 | 27.5 | 45 | 27.5 | - |
| SPZ 160-08 | 8 | 160 | 164 | 3 | 2517 | 60 | - | 100 | 132 | 27.5 | 45 | 27.5 | - |
| SPZ 180-08 | 8 | 180 | 184 | 3 | 2517 | 60 | - | 100 | 152 | 27.5 | 45 | 27.5 | - |
| SPZ 200-08 | 8 | 200 | 204 | 3 | 3020 | 75 | - | 100 | 172 | 24.5 | 51 | 24.5 | - |
| SPZ 224-08 | 8 | 224 | 228 | 6 | 3020 | 75 | - | 100 | 196 | 24.5 | 51 | 24.5 | - |
| SPZ 250-08 | 8 | 250 | 254 | 6 | 3020 | 75 | - | 100 | 222 | 24.5 | 51 | 24.5 | 145 |
| SPZ 280-08 | 8 | 280 | 284 | 6 | 3020 | 75 | - | 100 | 252 | 24.5 | 51 | 24.5 | 145 |
| SPZ 355-08 | 8 | 355 | 359 | 5 | 3030 | 75 | - | 100 | 326 | 12 | 76 | 12 | 145 |
| SPZ 400-08 | 8 | 400 | 404 | 5 | 3030 | 75 | - | 100 | 372 | 12 | 76 | 12 | 145 |
| SPZ 450-08 | 8 | 450 | 454 | 5 | 3535 | 90 | - | 100 | 422 | 5.5 | 89 | 5.5 | 170 |

# SPA-01

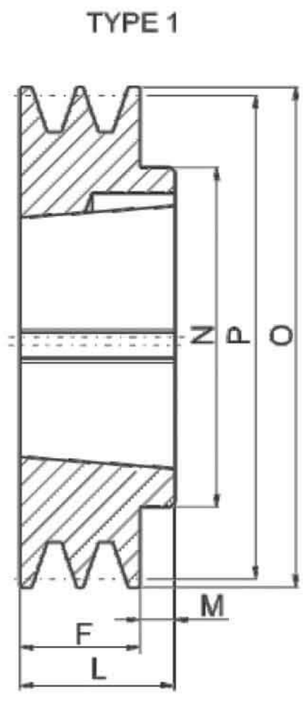


TYPE 1

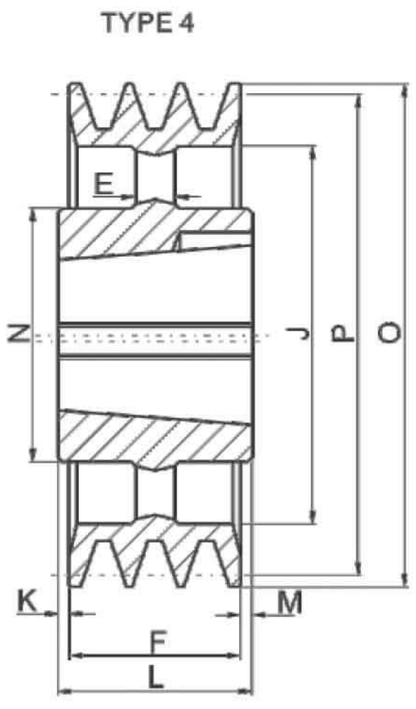


TYPE 4

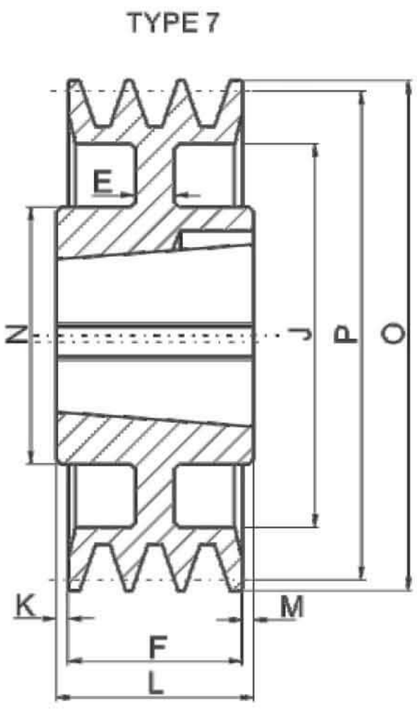


TYPE 7

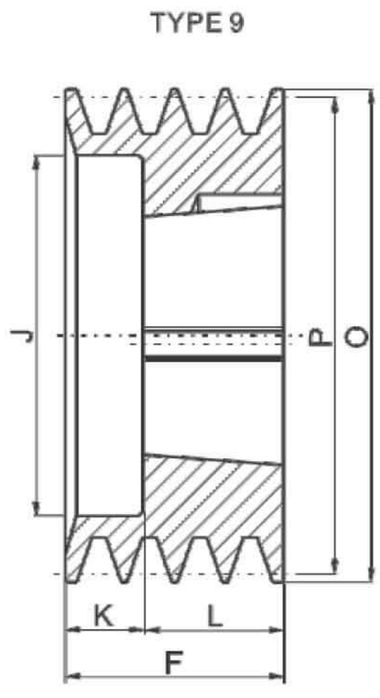


TYPE 9

| 型号 | 槽数 | 节圆（P） | 外径（O） | 图例（Type） | 锥套 | 最大孔 | 轮板厚（E） | 轮厚（F） | 止口（J） | K | 孔长（L） | M | 小外圆直径（N） |
|---|---|---|---|---|---|---|---|---|---|---|---|---|---|
| SPA63-01 | 1 | 63 | 68.5 | 9 | 1108 | 28 | - | 40 | 30 | 18 | 22 | - | - |
| SPA67-01 | 1 | 67 | 72.5 | 1 | 1108 | 28 | - | 20 | 38 | - | 22 | 2 | 62 |
| SPA71-01 | 1 | 71 | 76.5 | 1 | 1108 | 28 | - | 20 | - | - | 22 | 2 | 62 |
| SPA75-01 | 1 | 75 | 80.5 | 1 | 1108 | 28 | - | 20 | - | - | 22 | 2 | 62 |
| SPA80-01 | 1 | 80 | 85.5 | 1 | 1210 | 32 | - | 20 | - | - | 25 | 5 | 75 |
| SPA85-01 | 1 | 85 | 90.5 | 1 | 1210 | 32 | - | 20 | - | - | 25 | 5 | 75 |
| SPA90-01 | 1 | 90 | 95.5 | 1 | 1210 | 32 | - | 20 | - | - | 25 | 5 | 75 |
| SPA95-01 | 1 | 95 | 100.5 | 1 | 1210 | 32 | - | 20 | - | - | 25 | 5 | 75 |
| SPA100-01 | 1 | 100 | 105.5 | 1 | 1610 | 42 | - | 20 | - | - | 25 | 5 | 80 |
| SPA106-01 | 1 | 106 | 111.5 | 1 | 1610 | 42 | - | 20 | - | - | 25 | 5 | 80 |
| SPA112-01 | 1 | 112 | 117.5 | 1 | 1610 | 42 | - | 20 | - | - | 25 | 5 | 80 |
| SPA118-01 | 1 | 118 | 123.5 | 1 | 1610 | 42 | - | 20 | - | - | 25 | 5 | 80 |
| SPA125-01 | 1 | 125 | 130.5 | 1 | 1610 | 42 | - | 20 | - | - | 25 | 5 | 80 |
| SPA132-01 | 1 | 132 | 137.5 | 1 | 1610 | 42 | - | 20 | - | - | 25 | 5 | 80 |
| SPA140-01 | 1 | 140 | 145.5 | 7 | 1610 | 42 | - | 20 | 110 | - | 25 | 5 | 80 |
| SPA150-01 | 1 | 150 | 155.5 | 7 | 1610 | 42 | - | 20 | 118 | - | 25 | 5 | 80 |
| SPA160-01 | 1 | 160 | 165.5 | 7 | 1610 | 42 | - | 20 | 128 | - | 25 | 5 | 80 |
| SPA170-01 | 1 | 170 | 175.5 | 7 | 1610 | 42 | - | 20 | 138 | - | 25 | 5 | 80 |
| SPA180-01 | 1 | 180 | 185.5 | 7 | 1610 | 42 | - | 20 | 148 | - | 25 | 5 | 80 |
| SPA190-01 | 1 | 190 | 195.5 | 7 | 1610 | 42 | - | 20 | 158 | - | 25 | 5 | 80 |
| SPA200-01 | 1 | 200 | 205.5 | 7 | 2012 | 50 | 10 | 20 | 165 | - | 32 | 12 | 100 |
| SPA212-01 | 1 | 212 | 217.5 | 7 | 2012 | 50 | 10 | 20 | 177 | - | 32 | 12 | 100 |
| SPA224-01 | 1 | 224 | 229.5 | 4 | 2012 | 50 | 10 | 20 | 189 | - | 32 | 12 | 100 |
| SPA250-01 | 1 | 250 | 255.5 | 4 | 2012 | 50 | 10 | 20 | 215 | - | 32 | 12 | 100 |
| SPA280-01 | 1 | 280 | 285.5 | 4 | 2012 | 50 | 10 | 20 | 245 | - | 32 | 12 | 100 |
| SPA315-01 | 1 | 315 | 320.5 | 4 | 2012 | 50 | - | 20 | 280 | - | 32 | 12 | 100 |
| SPA355-01 | 1 | 355 | 360.5 | 4 | 2012 | 50 | - | 20 | 320 | - | 32 | 12 | 100 |
| SPA400-01 | 1 | 400 | 405.5 | 4 | 2012 | 50 | - | 20 | 365 | - | 32 | 12 | 100 |
| SPA450-01 | 1 | 450 | 455.5 | 4 | 2012 | 50 | - | 20 | 415 | - | 32 | 12 | 100 |
| SPA500-01 | 1 | 500 | 505.5 | 4 | 2517 | 60 | - | 20 | 465 | - | 45 | 25 | 120 |
| SPA630-01 | 1 | 630 | 635.5 | 4 | 2517 | 60 | - | 20 | 595 | - | 45 | 25 | 120 |

# 锥套式皮带轮

Cone sleeve type belt pulley

# SPA-02

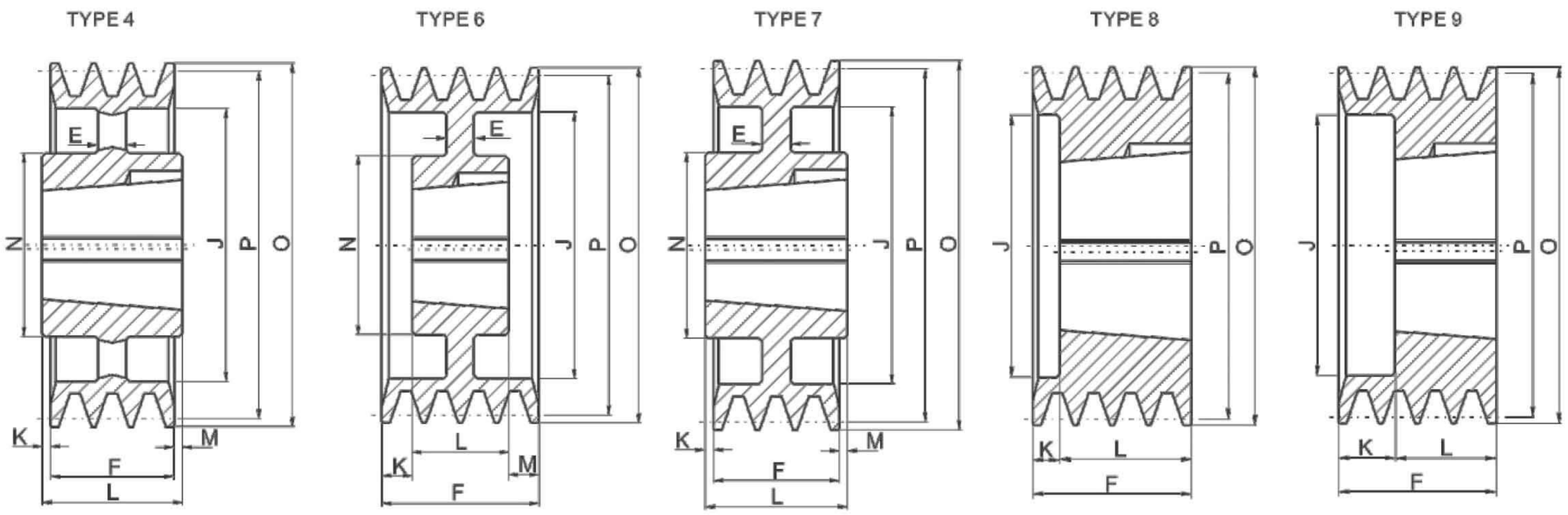


| 型号 | 槽数 | 节圆（P） | 外径（O） | 图例（Type） | 锥套 | 最大孔 | 轮板厚（E） | 轮厚（F） | 止口（J） | K | 孔长（L） | M | 小外圆直径（N） |
|---|---|---|---|---|---|---|---|---|---|---|---|---|---|
| SPA63-02 | 2 | 63 | 68.5 | 9 | 1108 | 28 | - | 55 | 36 | 33 | 22 | - | - |
| SPA67-02 | 2 | 67 | 72.5 | 8 | 1108 | 28 | - | 35 | 37 | 13 | 22 | - | - |
| SPA71-02 | 2 | 71 | 76.5 | 8 | 1108 | 28 | - | 35 | 40 | 13 | 22 | - | - |
| SPA75-02 | 2 | 75 | 80.5 | 8 | 1108 | 28 | - | 35 | 44 | 10 | 22 | - | - |
| SPA80-02 | 2 | 80 | 85.5 | 8 | 1210 | 32 | - | 35 | 47 | 10 | 25 | - | - |
| SPA85-02 | 2 | 85 | 90.5 | 8 | 1210 | 32 | - | 35 | 50 | 10 | 25 | - | - |
| SPA90-02 | 2 | 90 | 95.5 | 8 | 1610 | 42 | - | 35 | 60 | 10 | 25 | - | - |
| SPA95-02 | 2 | 95 | 100.5 | 8 | 1610 | 42 | - | 35 | 64 | 10 | 25 | - | - |
| SPA100-02 | 2 | 100 | 105.5 | 8 | 1610 | 42 | - | 35 | 70 | 10 | 25 | - | - |
| SPA106-02 | 2 | 106 | 111.5 | 8 | 1610 | 42 | - | 35 | 76 | 10 | 25 | - | - |
| SPA112-02 | 2 | 112 | 117.5 | 8 | 1610 | 42 | - | 35 | 80 | 10 | 25 | - | - |
| SPA118-02 | 2 | 118 | 123.5 | 8 | 1610 | 42 | - | 35 | 86 | 10 | 25 | - | - |
| SPA125-02 | 2 | 125 | 130.5 | 8 | 1610 | 42 | - | 35 | 90 | 10 | 25 | - | - |
| SPA132-02 | 2 | 132 | 137.5 | 8 | 2012 | 50 | - | 35 | 98 | 3 | 32 | - | - |
| SPA140-02 | 2 | 140 | 145.5 | 8 | 2012 | 50 | - | 35 | 106 | 3 | 32 | - | - |
| SPA150-02 | 2 | 150 | 155.5 | 8 | 2012 | 50 | - | 35 | 116 | 3 | 32 | - | - |
| SPA160-02 | 2 | 160 | 165.5 | 8 | 2012 | 50 | - | 35 | 125 | 3 | 32 | - | - |
| SPA170-02 | 2 | 170 | 175.5 | 6 | 2012 | 50 | - | 35 | 135 | 3 | 32 | - | - |
| SPA180-02 | 2 | 180 | 185.5 | 6 | 2012 | 50 | 15 | 35 | 148 | 1.5 | 32 | 1.5 | 100 |
| SPA190-02 | 2 | 190 | 195.5 | 6 | 2012 | 50 | 15 | 35 | 158 | 1.5 | 32 | 1.5 | 100 |
| SPA200-02 | 2 | 200 | 205.5 | 7 | 2517 | 60 | 15 | 35 | 165 | 5 | 45 | 5 | 120 |
| SPA212-02 | 2 | 212 | 217.5 | 7 | 2517 | 60 | 15 | 35 | 177 | 5 | 45 | 5 | 120 |
| SPA224-02 | 2 | 224 | 229.5 | 7 | 2517 | 60 | 15 | 35 | 189 | 5 | 45 | 5 | 120 |
| SPA250-02 | 2 | 250 | 255.5 | 4 | 2517 | 60 | 20 | 35 | 215 | 5 | 45 | 5 | 120 |
| SPA280-02 | 2 | 280 | 285.5 | 4 | 2517 | 60 | 20 | 35 | 245 | - | 45 | 10 | 120 |
| SPA315-02 | 2 | 315 | 320.5 | 4 | 2517 | 60 | - | 35 | 280 | - | 45 | 10 | 120 |
| SPA355-02 | 2 | 355 | 360.5 | 4 | 2517 | 60 | - | 35 | 320 | - | 45 | 10 | 120 |
| SPA400-02 | 2 | 400 | 405.5 | 4 | 2517 | 60 | - | 35 | 365 | - | 45 | 10 | 120 |
| SPA450-02 | 2 | 450 | 455.5 | 4 | 2517 | 60 | - | 35 | 405 | - | 45 | 10 | 120 |
| SPA500-02 | 2 | 500 | 505.5 | 4 | 2517 | 60 | - | 35 | 465 | - | 45 | 10 | 120 |
| SPA630-02 | 2 | 630 | 635.5 | 4 | 3020 | 75 | - | 35 | 595 | - | 51 | 16 | 145 |

# SPA-03

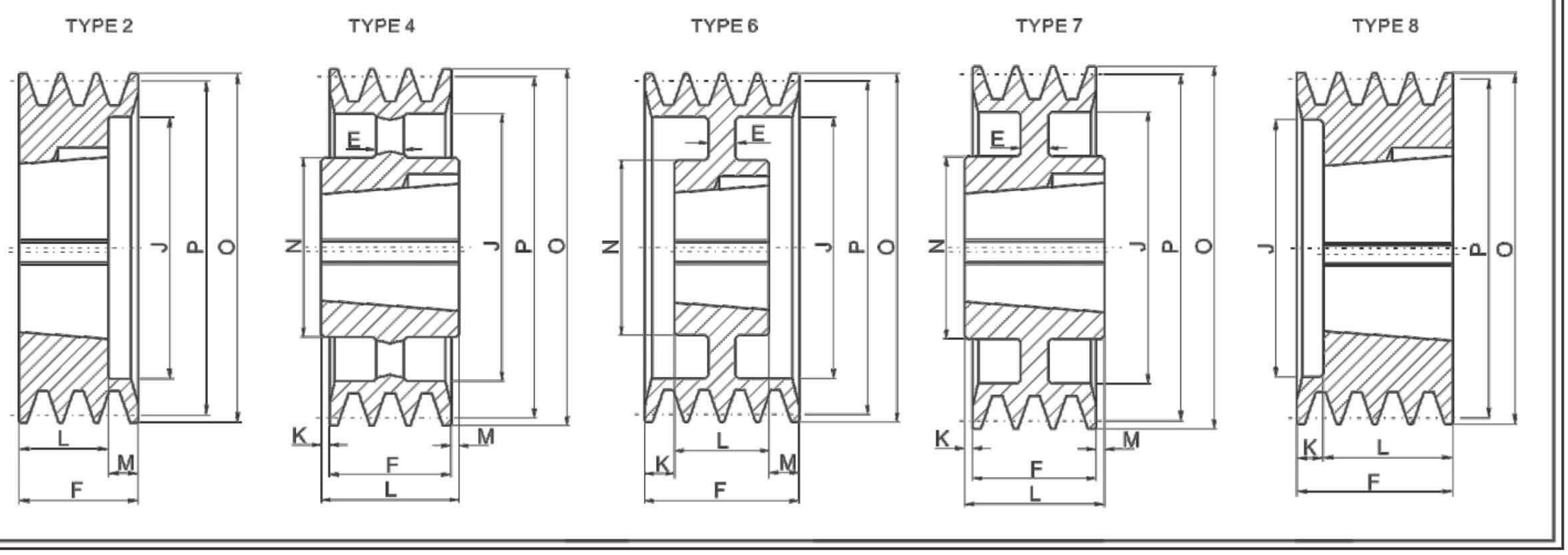


| 型号 | 槽数 | 节圆（P） | 外径（O） | 图例（Type） | 锥套 | 最大孔 | 轮板厚（E） | 轮厚（F） | 止口（J） | K | 孔长（L） | M | 小外圆直径（N） |
|---|---|---|---|---|---|---|---|---|---|---|---|---|---|
| SPA71-03 | 3 | 71 | 76.5 | 8 | 1108 | 28 | - | 50 | 40 | 28 | 22 | - | - |
| SPA75-03 | 3 | 75 | 80.5 | 8 | 1108 | 28 | - | 50 | 44 | 25 | 22 | - | - |
| SPA80-03 | 3 | 80 | 85.5 | 8 | 1210 | 32 | - | 50 | 47 | 25 | 25 | - | - |
| SPA85-03 | 3 | 85 | 90.5 | 8 | 1210 | 32 | - | 50 | 50 | 25 | 25 | - | - |
| SPA90-03 | 3 | 90 | 95.5 | 8 | 1610 | 42 | - | 50 | 60 | 25 | 25 | - | - |
| SPA95-03 | 3 | 95 | 100.5 | 8 | 1610 | 42 | - | 50 | 64 | 25 | 25 | - | - |
| SPA100-03 | 3 | 100 | 105.5 | 2 | 1610 | 42 | - | 50 | 70 | - | 25 | 25 | - |
| SPA106-03 | 3 | 106 | 111.5 | 2 | 1610 | 42 | - | 50 | 76 | - | 25 | 25 | - |
| SPA112-03 | 3 | 112 | 117.5 | 8 | 2012 | 50 | - | 50 | 83 | 18 | 32 | - | - |
| SPA118-03 | 3 | 118 | 123.5 | 2 | 2012 | 50 | - | 50 | 86 | - | 32 | 18 | - |
| SPA125-03 | 3 | 125 | 130.5 | 2 | 2012 | 50 | - | 50 | 92 | - | 32 | 18 | - |
| SPA132-03 | 3 | 132 | 137.5 | 2 | 2012 | 50 | - | 50 | 98 | - | 32 | 18 | - |
| SPA140-03 | 3 | 140 | 145.5 | 8 | 2517 | 60 | - | 50 | 106 | 5 | 45 | - | - |
| SPA150-03 | 3 | 150 | 155.5 | 8 | 2517 | 60 | - | 50 | 116 | 5 | 45 | - | - |
| SPA160-03 | 3 | 160 | 165.5 | 8 | 2517 | 60 | - | 50 | 126 | 5 | 45 | - | - |
| SPA170-03 | 3 | 170 | 175.5 | 8 | 2517 | 60 | - | 50 | 138 | 5 | 45 | - | - |
| SPA180-03 | 3 | 180 | 185.5 | 8 | 2517 | 60 | - | 50 | 146 | 5 | 45 | - | - |
| SPA190-03 | 3 | 190 | 195.5 | 6 | 2517 | 60 | - | 50 | 158 | 5 | 45 | - | - |
| SPA200-03 | 3 | 200 | 205.5 | 6 | 2517 | 60 | 20 | 50 | 165 | 2.5 | 45 | 2.5 | 120 |
| SPA212-03 | 3 | 212 | 217.5 | 6 | 2517 | 60 | 20 | 50 | 177 | 2.5 | 45 | 2.5 | 120 |
| SPA224-03 | 3 | 224 | 229.5 | 6 | 2517 | 60 | 20 | 50 | 189 | 2.5 | 45 | 2.5 | 120 |
| SPA250-03 | 3 | 250 | 255.5 | 5 | 2517 | 60 | 20 | 50 | 215 | 2.5 | 45 | 2.5 | 120 |
| SPA280-03 | 3 | 280 | 285.5 | 5 | 2517 | 60 | 20 | 50 | 245 | 2.5 | 45 | 2.5 | 120 |
| SPA315-03 | 3 | 315 | 320.5 | 4 | 3020 | 75 | 25 | 50 | 280 | 0.5 | 51 | 0.5 | 145 |
| SPA355-03 | 3 | 355 | 360.5 | 4 | 3020 | 75 | - | 50 | 320 | 0.5 | 51 | 0.5 | 145 |
| SPA400-03 | 3 | 400 | 405.5 | 4 | 3020 | 75 | - | 50 | 365 | 0.5 | 51 | 0.5 | 145 |
| SPA450-03 | 3 | 450 | 455.5 | 4 | 3020 | 75 | - | 50 | 415 | 0.5 | 51 | 0.5 | 145 |
| SPA500-03 | 3 | 500 | 505.5 | 4 | 3020 | 75 | - | 50 | 465 | 0.5 | 51 | 0.5 | 145 |
| SPA560-03 | 3 | 560 | 565.5 | 4 | 3020 | 75 | - | 50 | 525 | 0.5 | 51 | 0.5 | 145 |
| SPA630-03 | 3 | 630 | 635.5 | 4 | 3020 | 75 | - | 50 | 595 | 0.5 | 51 | 0.5 | 145 |
| SPA800-03 | 3 | 800 | 805.5 | 4 | 3535 | 90 | - | 50 | 765 | 19.5 | 89 | 19.5 | 170 |
| SPA1000-03 | 3 | 1000 | 1005.5 | 4 | 3535 | 90 | - | 50 | 965 | 19.5 | 89 | 19.5 | 170 |

# 锥套式皮带轮
Cone sleeve type belt pulley

# SPA-04

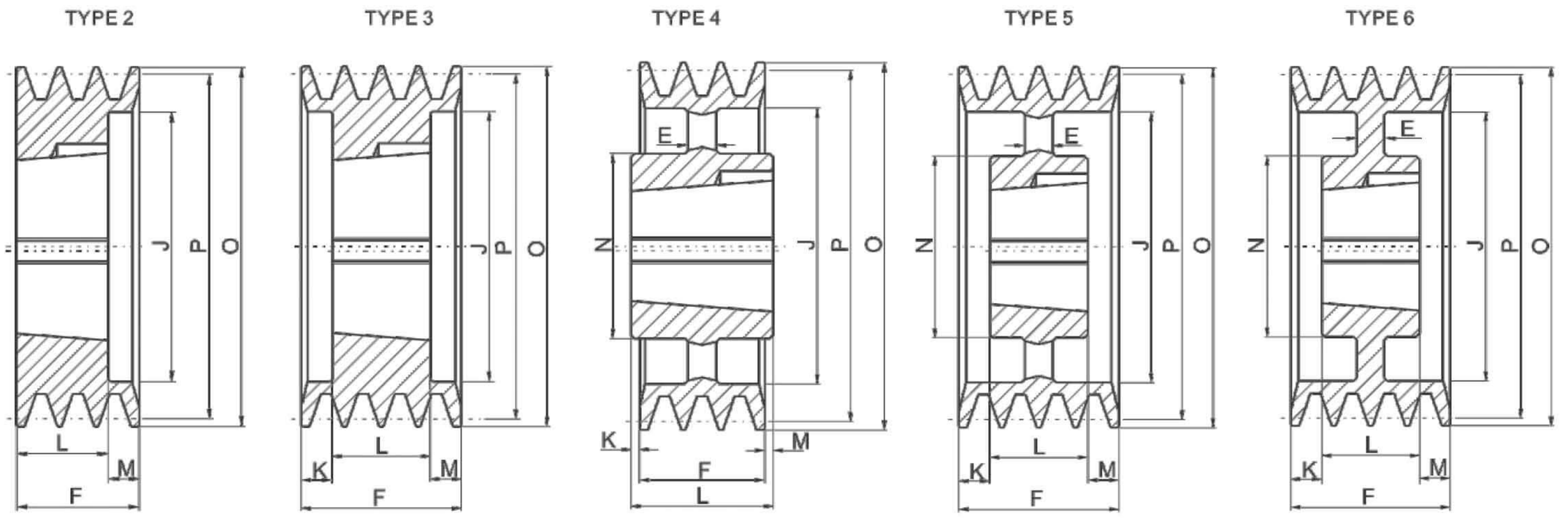


| 型号 | 槽数 | 节圆（P） | 外径（O） | 图例（Type） | 锥套 | 最大孔 | 轮板厚（E） | 轮厚（F） | 止口（J） | K | 孔长（L） | M | 小外圆直径（N） |
|---|---|---|---|---|---|---|---|---|---|---|---|---|---|
| SPA90-04 | 4 | 90 | 95.5 | 3 | 1615 | 42 | - | 65 | 64 | 13.5 | 38 | 1.35 | - |
| SPA95-04 | 4 | 95 | 100.5 | 3 | 1615 | 42 | - | 65 | 64 | 13.5 | 38 | 13.5 | - |
| SPA100-04 | 4 | 100 | 105.5 | 2 | 1615 | 42 | - | 65 | 70 | - | 38 | 27 | - |
| SPA106-04 | 4 | 106 | 111.5 | 8 | 2012 | 50 | - | 65 | 76 | 33 | 32 | - | - |
| SPA112-04 | 4 | 112 | 117.5 | 8 | 2012 | 50 | - | 65 | 80 | 33 | 32 | - | - |
| SPA118-04 | 4 | 118 | 123.5 | 2 | 2012 | 50 | - | 65 | 86 | - | 32 | 33 | - |
| SPA125-04 | 4 | 125 | 130.5 | 2 | 2012 | 50 | - | 65 | 92 | - | 32 | 33 | - |
| SPA132-04 | 4 | 132 | 137.5 | 2 | 2517 | 60 | - | 65 | 98 | - | 45 | 20 | - |
| SPA140-04 | 4 | 140 | 145.5 | 2 | 2517 | 60 | - | 65 | 106 | - | 45 | 20 | - |
| SPA150-04 | 4 | 150 | 155.5 | 2 | 2517 | 60 | - | 65 | 116 | - | 45 | 20 | - |
| SPA160-04 | 4 | 160 | 165.5 | 2 | 2517 | 60 | - | 65 | 126 | - | 45 | 20 | - |
| SPA170-04 | 4 | 170 | 175.5 | 2 | 2517 | 60 | - | 65 | 138 | - | 45 | 20 | - |
| SPA180-04 | 4 | 180 | 185.5 | 2 | 2517 | 60 | - | 65 | 146 | - | 45 | 20 | - |
| SPA190-04 | 4 | 190 | 195.5 | 6 | 2517 | 60 | - | 65 | 158 | - | 45 | 20 | - |
| SPA200-04 | 4 | 200 | 205.5 | 2 | 3020 | 75 | - | 65 | 165 | - | 51 | 14 | - |
| SPA212-04 | 4 | 212 | 217.5 | 2 | 3020 | 75 | - | 65 | 177 | - | 51 | 14 | - |
| SPA224-04 | 4 | 224 | 229.5 | 6 | 3020 | 75 | - | 65 | 189 | - | 51 | 14 | - |
| SPA250-04 | 4 | 250 | 255.5 | 6 | 3020 | 75 | 10 | 65 | 215 | 7 | 51 | 7 | 145 |
| SPA280-04 | 4 | 280 | 285.5 | 6 | 3020 | 75 | 10 | 65 | 245 | 7 | 51 | 7 | 145 |
| SPA315-04 | 4 | 315 | 320.5 | 6 | 3020 | 75 | 10 | 65 | 280 | 7 | 51 | 7 | 145 |
| SPA355-04 | 4 | 355 | 360.5 | 5 | 3020 | 75 | - | 65 | 320 | 7 | 51 | 7 | 145 |
| SPA400-04 | 4 | 400 | 405.5 | 5 | 3020 | 75 | - | 65 | 365 | 7 | 51 | 7 | 145 |
| SPA450-04 | 4 | 450 | 455.5 | 5 | 3020 | 75 | - | 65 | 415 | 7 | 51 | 7 | 145 |
| SPA500-04 | 4 | 500 | 505.5 | 5 | 3020 | 75 | - | 65 | 465 | 7 | 51 | 7 | 145 |
| SPA560-04 | 4 | 560 | 565.5 | 4 | 3535 | 90 | - | 65 | 525 | 12 | 89 | 12 | 170 |
| SPA630-04 | 4 | 630 | 635.5 | 4 | 3535 | 90 | - | 65 | 595 | 12 | 89 | 12 | 170 |
| SPA800-04 | 4 | 800 | 805.5 | 4 | 3535 | 90 | - | 65 | 765 | 12 | 89 | 12 | 170 |
| SPA1000-04 | 4 | 1000 | 1005.5 | 4 | 4040 | 100 | - | 65 | 965 | 18.5 | 102 | 18.5 | 200 |

# SPA-05

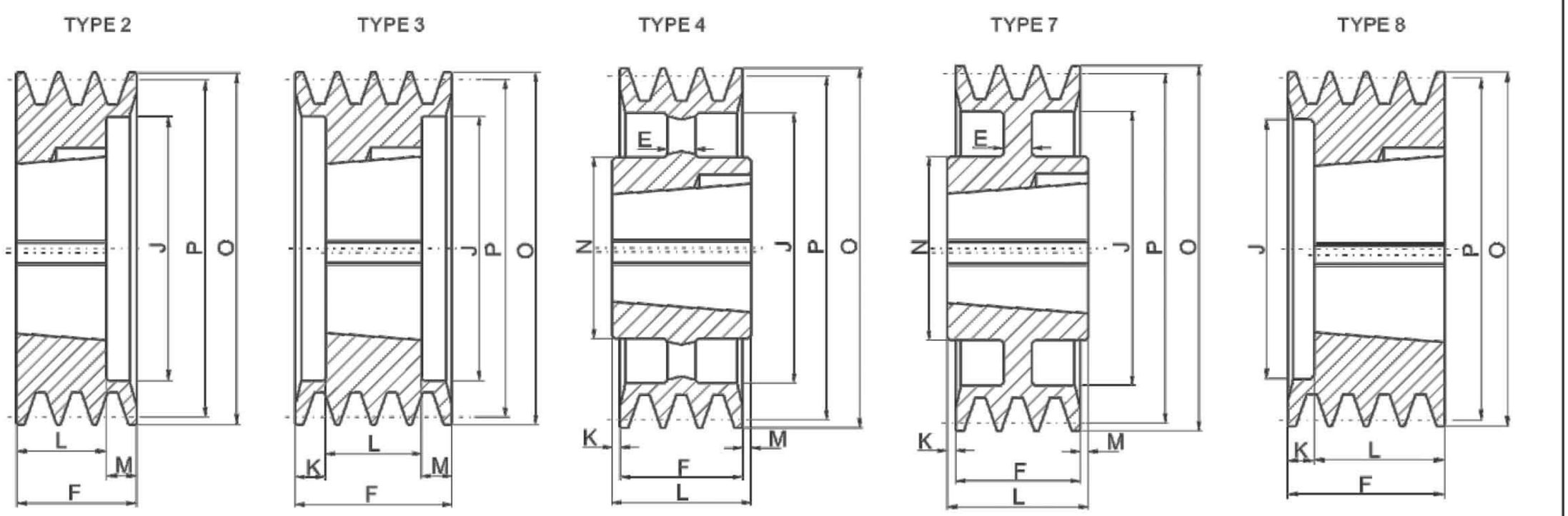


| 型号 | 槽数 | 节圆（P） | 外径（O） | 图例（Type） | 锥套 | 最大孔 | 轮板厚（E） | 轮厚（F） | 止口（J） | K | 孔长（L） | M | 小外圆直径（N） |
|---|---|---|---|---|---|---|---|---|---|---|---|---|---|
| SPA100-05 | 5 | 100 | 105.5 | 2 | 1615 | 42 | - | 80 | 70 | - | 38 | 42 | - |
| SPA106-05 | 5 | 106 | 111.5 | 8 | 2012 | 50 | - | 80 | 76 | 48 | 32 | - | - |
| SPA112-05 | 5 | 112 | 117.5 | 8 | 2012 | 50 | - | 80 | 80 | 48 | 32 | - | - |
| SPA118-05 | 5 | 118 | 123.5 | 2 | 2012 | 50 | - | 80 | 86 | - | 32 | 48 | - |
| SPA125-05 | 5 | 125 | 130.5 | 3 | 2012 | 50 | - | 80 | 92 | 24 | 32 | 24 | - |
| SPA132-05 | 5 | 132 | 137.5 | 3 | 2517 | 60 | - | 80 | 98 | 17.5 | 45 | 17.5 | - |
| SPA140-05 | 5 | 140 | 145.5 | 3 | 2517 | 60 | - | 80 | 106 | 17.5 | 45 | 17.5 | - |
| SPA150-05 | 5 | 150 | 155.5 | 3 | 2517 | 60 | - | 80 | 116 | 17.5 | 45 | 17.5 | - |
| SPA160-05 | 5 | 160 | 165.5 | 3 | 2517 | 60 | - | 80 | 126 | 17.5 | 45 | 17.5 | - |
| SPA170-05 | 5 | 170 | 175.5 | 3 | 2517 | 60 | - | 80 | 146 | 17.5 | 45 | 17.5 | - |
| SPA180-05 | 5 | 180 | 185.5 | 3 | 3020 | 75 | - | 80 | 146 | 14.5 | 51 | 14.5 | - |
| SPA190-05 | 5 | 190 | 195.5 | 3 | 3020 | 75 | - | 80 | 156 | 14.5 | 51 | 14.5 | - |
| SPA200-05 | 5 | 200 | 205.5 | 3 | 3020 | 75 | - | 80 | 165 | 14.5 | 51 | 14.5 | - |
| SPA212-05 | 5 | 212 | 217.5 | 2 | 3020 | 75 | - | 80 | 177 | - | 51 | 29 | - |
| SPA224-05 | 5 | 224 | 229.5 | 6 | 3020 | 75 | - | 80 | 189 | - | 51 | 29 | - |
| SPA250-05 | 5 | 250 | 255.5 | 6 | 3020 | 75 | 10 | 80 | 215 | 14.5 | 51 | 14.5 | 150 |
| SPA280-05 | 5 | 280 | 285.5 | 7 | 3535 | 90 | 10 | 80 | 245 | 4.5 | 89 | 4.5 | 170 |
| SPA315-05 | 5 | 315 | 320.5 | 4 | 3535 | 90 | 12 | 80 | 280 | 4.5 | 89 | 4.5 | 170 |
| SPA355-05 | 5 | 355 | 360.5 | 4 | 3535 | 90 | - | 80 | 320 | 4.5 | 89 | 4.5 | 170 |
| SPA400-05 | 5 | 400 | 405.5 | 4 | 3535 | 90 | - | 80 | 365 | 4.5 | 89 | 4.5 | 170 |
| SPA450-05 | 5 | 450 | 455.5 | 4 | 3535 | 90 | - | 80 | 415 | 4.5 | 89 | 4.5 | 170 |
| SPA500-05 | 5 | 500 | 505.5 | 4 | 3535 | 90 | - | 80 | 465 | 4.5 | 89 | 4.5 | 170 |
| SPA560-05 | 5 | 560 | 565.5 | 4 | 3535 | 90 | - | 80 | 525 | 4.5 | 89 | 4.5 | 170 |
| SPA630-05 | 5 | 630 | 635.5 | 4 | 3535 | 90 | - | 80 | 595 | 4.5 | 89 | 4.5 | 170 |
| SPA800-05 | 5 | 800 | 805.5 | 4 | 4040 | 100 | - | 80 | 765 | 11 | 102 | 11 | 200 |
| SPA1000-05 | 5 | 1000 | 1005.5 | 4 | 4545 | 110 | - | 80 | 965 | 17 | 114 | 17 | 225 |

# 锥套式皮带轮

Cone sleeve type belt pulley

# SPA-06

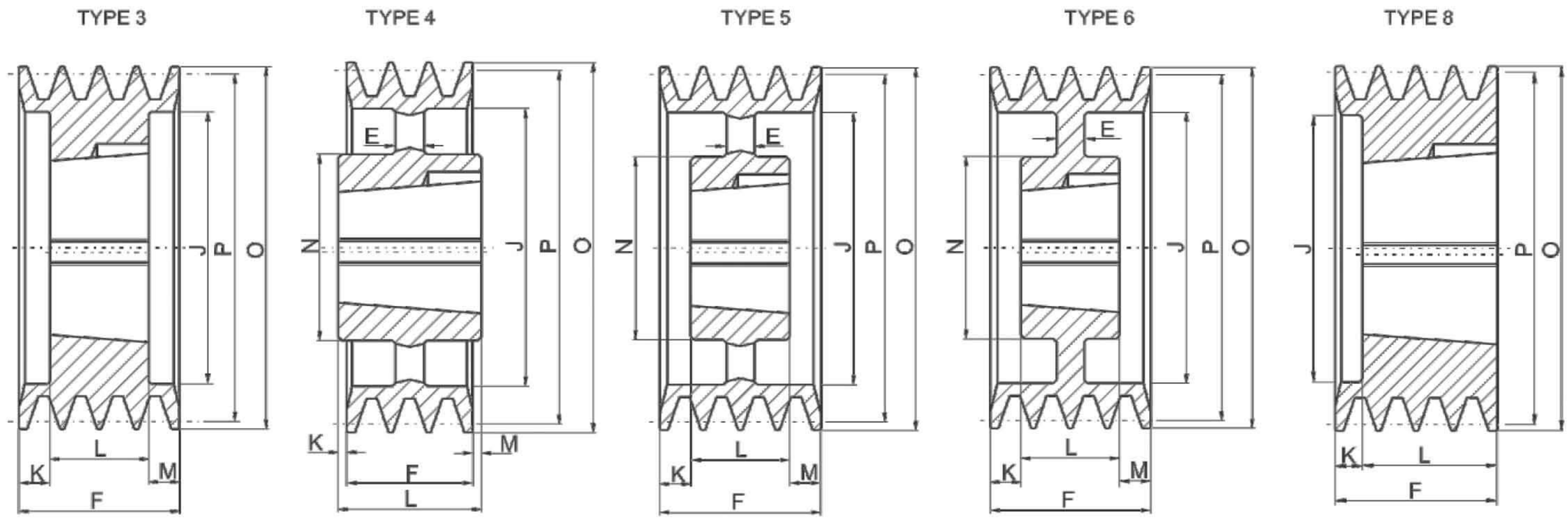


| 型号 | 槽数 | 节圆（P） | 外径（O） | 图例（Type） | 锥套 | 最大孔 | 轮板厚（E） | 轮厚（F） | 止口（J） | K | 孔长（L） | M | 小外圆直径（N） |
|---|---|---|---|---|---|---|---|---|---|---|---|---|---|
| SPA100-06 | 6 | 100 | 105.5 | 3 | 1615 | 42 | - | 95 | 70 | 28.5 | 38 | 28.5 | - |
| SPA106-06 | 6 | 106 | 111.5 | 8 | 2012 | 50 | - | 95 | 76 | 63 | 32 | - | - |
| SPA112-06 | 6 | 112 | 117.5 | 8 | 2012 | 50 | - | 95 | 80 | 63 | 32 | - | - |
| SPA118-06 | 6 | 118 | 123.5 | 8 | 2012 | 50 | - | 95 | 86 | 63 | 32 | - | - |
| SPA125-06 | 6 | 125 | 130.5 | 3 | 2012 | 50 | - | 95 | 92 | 31.5 | 32 | 31.5 | - |
| SPA132-06 | 6 | 132 | 137.5 | 3 | 2517 | 60 | - | 95 | 98 | 25 | 45 | 25 | - |
| SPA140-06 | 6 | 140 | 145.5 | 3 | 2517 | 60 | - | 95 | 106 | 25 | 45 | 25 | - |
| SPA150-06 | 6 | 150 | 155.5 | 3 | 2517 | 60 | - | 95 | 116 | 25 | 45 | 25 | - |
| SPA160-06 | 6 | 160 | 165.5 | 3 | 2517 | 60 | - | 95 | 126 | 25 | 45 | 25 | - |
| SPA180-06 | 6 | 180 | 185.5 | 3 | 3020 | 75 | - | 95 | 146 | 22 | 51 | 22 | - |
| SPA200-06 | 6 | 200 | 205.5 | 3 | 3020 | 75 | - | 95 | 165 | 22 | 51 | 22 | - |
| SPA224-06 | 6 | 224 | 229.5 | 6 | 3020 | 75 | - | 95 | 189 | 22 | 51 | 22 | - |
| SPA250-06 | 6 | 250 | 255.5 | 6 | 3020 | 75 | 20 | 95 | 215 | 22 | 51 | 22 | 150 |
| SPA280-06 | 6 | 280 | 285.5 | 6 | 3535 | 90 | 25 | 95 | 245 | 3 | 89 | 3 | 170 |
| SPA315-06 | 6 | 315 | 320.5 | 6 | 3535 | 90 | 25 | 95 | 280 | 3 | 89 | 3 | 170 |
| SPA355-06 | 6 | 355 | 360.5 | 5 | 3535 | 90 | - | 95 | 320 | 3 | 89 | 3 | 170 |
| SPA400-06 | 6 | 400 | 405.5 | 5 | 3535 | 90 | - | 95 | 365 | 3 | 89 | 3 | 170 |
| SPA450-06 | 6 | 450 | 455.5 | 5 | 3535 | 90 | - | 95 | 415 | 3 | 89 | 3 | 170 |
| SPA500-06 | 6 | 500 | 505.5 | 5 | 3535 | 90 | - | 95 | 465 | 3 | 89 | 3 | 170 |
| SPA560-06 | 6 | 560 | 565.5 | 5 | 3535 | 90 | - | 95 | 525 | 3 | 89 | 3 | 170 |
| SPA630-06 | 6 | 630 | 635.5 | 4 | 4040 | 100 | - | 95 | 595 | 3.5 | 102 | 3.5 | 200 |
| SPA800-06 | 6 | 800 | 805.5 | 4 | 4040 | 100 | - | 95 | 765 | 3.5 | 102 | 3.5 | 200 |
| SPA1000-06 | 6 | 1000 | 1005.5 | 4 | 4545 | 110 | - | 95 | 965 | 9.5 | 114 | 9.5 | 225 |

# SPB-01

TYPE 1

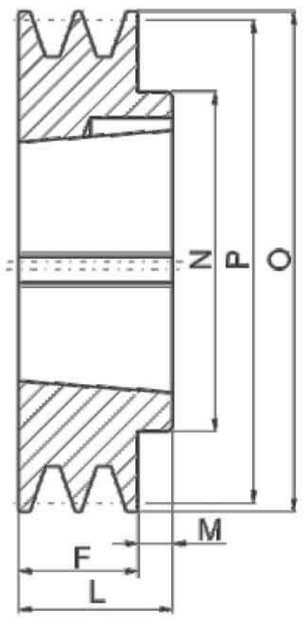


TYPE 6

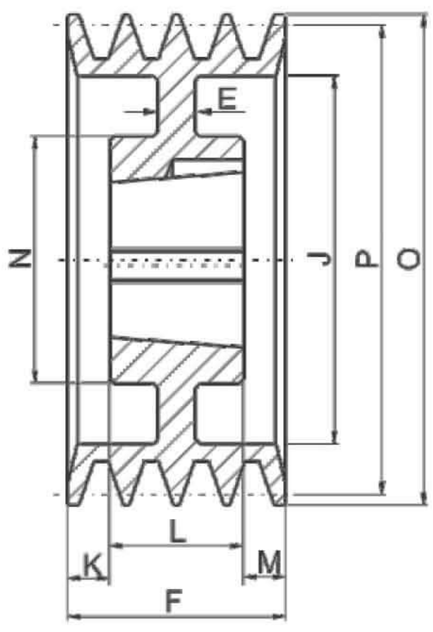


TYPE 7

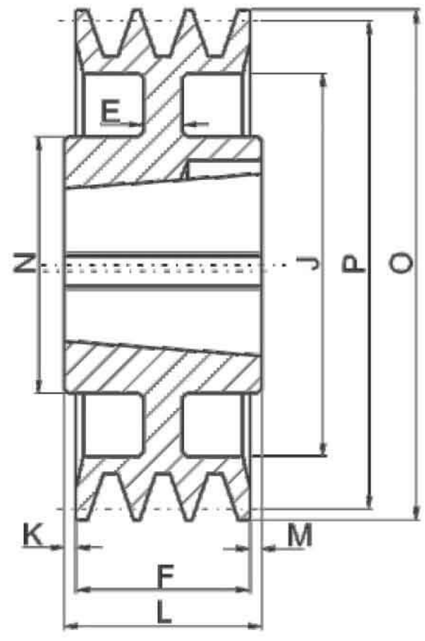


| 型号 | 槽数 | 节圆（P） | 外径（O） | 图例（Type） | 锥套 | 最大孔 | 轮板厚（E） | 轮厚（F） | 止口（J） | K | 孔长（L） | M | 小外圆直径（N） |
|---|---|---|---|---|---|---|---|---|---|---|---|---|---|
| SPB100-01 | 1 | 100 | 107 | 1 | 1610 | 42 | – | 25 | – | – | 25 | – | – |
| SPB106-01 | 1 | 106 | 113 | 1 | 1610 | 42 | – | 25 | – | – | 25 | – | – |
| SPB112-01 | 1 | 112 | 119 | 1 | 1610 | 42 | – | 25 | – | – | 25 | – | – |
| SPB118-01 | 1 | 118 | 125 | 1 | 1610 | 42 | – | 25 | – | – | 25 | – | – |
| SPB125-01 | 1 | 125 | 132 | 1 | 1610 | 42 | – | 25 | – | – | 25 | – | – |
| SPB132-01 | 1 | 132 | 139 | 1 | 1610 | 42 | – | 25 | – | – | 25 | – | – |
| SPB140-01 | 1 | 140 | 147 | 1 | 1610 | 42 | – | 25 | – | – | 25 | – | – |
| SPB150-01 | 1 | 150 | 157 | 6 | 1610 | 42 | – | 25 | 111 | – | 25 | – | – |
| SPB160-01 | 1 | 160 | 167 | 6 | 1610 | 42 | – | 25 | 119 | – | 25 | – | – |
| SPB170-01 | 1 | 170 | 177 | 6 | 1610 | 42 | – | 25 | 129 | – | 25 | – | – |
| SPB180-01 | 1 | 180 | 187 | 6 | 1610 | 42 | 10 | 25 | 139 | – | 25 | – | 80 |
| SPB190-01 | 1 | 190 | 197 | 7 | 2012 | 50 | 10 | 25 | 149 | 3.5 | 32 | 3.5 | 100 |
| SPB200-01 | 1 | 200 | 207 | 7 | 2012 | 50 | 10 | 25 | 159 | 3.5 | 32 | 3.5 | 100 |
| SPB212-01 | 1 | 212 | 219 | 7 | 2012 | 50 | 10 | 25 | 171 | 3.5 | 32 | 3.5 | 100 |
| SPB224-01 | 1 | 224 | 231 | 7 | 2012 | 50 | 10 | 25 | 183 | 3.5 | 32 | 3.5 | 100 |
| SPB236-01 | 1 | 236 | 243 | 7 | 2012 | 50 | 10 | 25 | 195 | 3.5 | 32 | 3.5 | 100 |
| SPB250-01 | 1 | 250 | 257 | 7 | 2012 | 50 | 10 | 25 | 209 | 3.5 | 32 | 3.5 | 100 |
| SPB280-01 | 1 | 280 | 287 | 4 | 2012 | 50 | 10 | 25 | 239 | 3.5 | 32 | 3.5 | 100 |
| SPB300-01 | 1 | 300 | 307 | 4 | 2012 | 50 | 10 | 25 | 259 | 3.5 | 32 | 3.5 | 100 |
| SPB315-01 | 1 | 315 | 322 | 4 | 2012 | 50 | 10 | 25 | 274 | 3.5 | 32 | 3.5 | 100 |

# 锥套式皮带轮

Cone sleeve type belt pulley

# SPB-02

TYPE 1

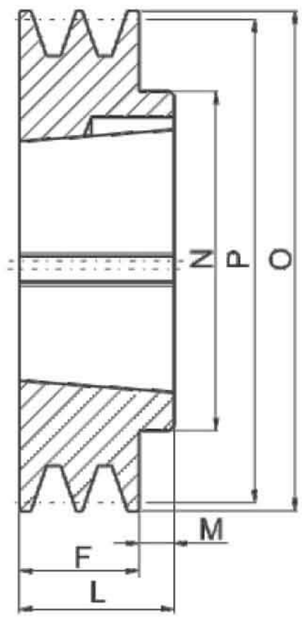


TYPE 2

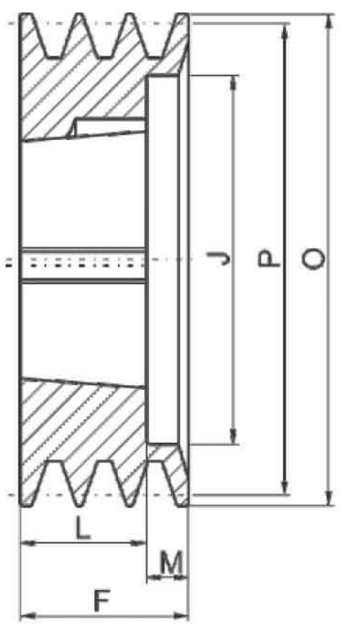


TYPE 4

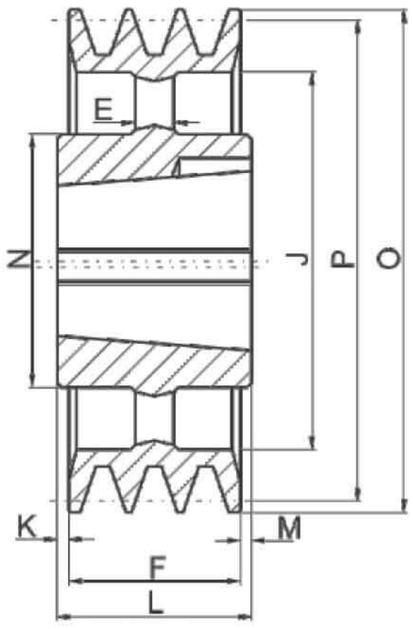


TYPE 7

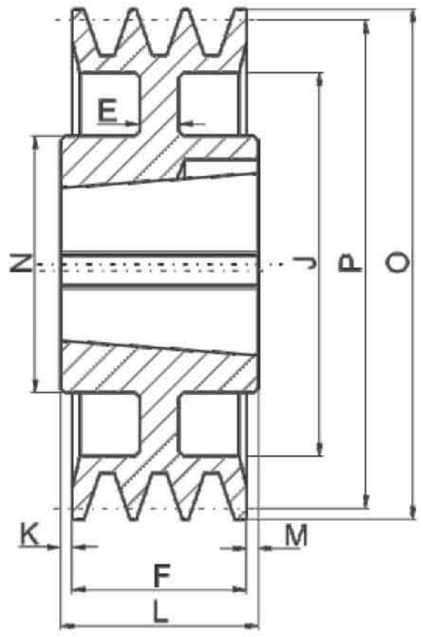


| 型号 | 槽数 | 节圆（P） | 外径（O） | 图例（Type） | 锥套 | 最大孔 | 轮板厚（E） | 轮厚（F） | 止口（J） | K | 孔长（L） | M | 小外圆直径（N） |
|---|---|---|---|---|---|---|---|---|---|---|---|---|---|
| SPB100-02 | 2 | 100 | 107 | 2 | 1610 | 42 | - | 44 | 64 | 19 | 25 | 19 | - |
| SPB106-02 | 2 | 106 | 113 | 2 | 1610 | 42 | - | 44 | 67 | - | 25 | 19 | - |
| SPB112-02 | 2 | 112 | 119 | 2 | 1610 | 42 | - | 44 | 72 | - | 25 | 19 | - |
| SPB118-02 | 2 | 118 | 125 | 2 | 1610 | 42 | - | 44 | 78 | - | 25 | 19 | - |
| SPB125-02 | 2 | 125 | 132 | 2 | 2012 | 50 | - | 44 | 84 | - | 32 | 12 | - |
| SPB132-02 | 2 | 132 | 139 | 2 | 2012 | 50 | - | 44 | 91 | - | 32 | 12 | - |
| SPB140-02 | 2 | 140 | 147 | 2 | 2012 | 50 | - | 44 | 99 | - | 32 | 12 | - |
| SPB150-02 | 2 | 150 | 157 | 2 | 2012 | 50 | - | 44 | 109 | - | 32 | 12 | - |
| SPB160-02 | 2 | 160 | 167 | 2 | 2012 | 50 | - | 44 | 119 | - | 32 | 12 | - |
| SPB170-02 | 2 | 170 | 177 | 2 | 2012 | 50 | - | 44 | 129 | - | 32 | 12 | - |
| SPB180-02 | 2 | 180 | 187 | 1 | 2517 | 60 |  | 44 | - | - | 45 | 1 | 120 |
| SPB190-02 | 2 | 190 | 197 | 1 | 2517 | 60 |  | 44 | - | - | 45 | 1 | 120 |
| SPB200-02 | 2 | 200 | 207 | 7 | 2517 | 60 |  | 44 | 159 | - | 45 | 1 | 120 |
| SPB212-02 | 2 | 212 | 219 | 7 | 2517 | 60 | 10 | 44 | 171 | - | 45 | 1 | 120 |
| SPB224-02 | 2 | 224 | 231 | 7 | 2517 | 60 | 10 | 44 | 183 | 1 | 45 | - | 120 |
| SPB236-02 | 2 | 236 | 243 | 7 | 2517 | 60 | 10 | 44 | 195 | 1 | 45 | - | 120 |
| SPB250-02 | 2 | 250 | 257 | 7 | 2517 | 60 | 10 | 44 | 209 | 1 | 45 | - | 120 |
| SPB280-02 | 2 | 280 | 287 | 4 | 2517 | 60 | 12 | 44 | 239 | 1 | 45 | - | 120 |
| SPB300-02 | 2 | 300 | 307 | 4 | 2517 | 60 | 12 | 44 | 259 | 1 | 45 | - | 120 |
| SPB315-02 | 2 | 315 | 322 | 4 | 2517 | 60 | 12 | 44 | 274 | 1 | 45 | - | 120 |
| SPB335-02 | 2 | 335 | 342 | 4 | 2517 | 60 | 12 | 44 | 294 | 1 | 45 | - | 120 |
| SPB355-02 | 2 | 355 | 362 | 4 | 3020 | 75 | - | 44 | 314 | 3.5 | 51 | 3.5 | 145 |
| SPB400-02 | 2 | 400 | 407 | 4 | 3020 | 75 | - | 44 | 359 | 3.5 | 51 | 3.5 | 145 |
| SPB450-02 | 2 | 450 | 457 | 4 | 3020 | 75 | - | 44 | 407 | 3.5 | 51 | 3.5 | 145 |
| SPB500-02 | 2 | 500 | 507 | 4 | 3020 | 75 | - | 44 | 457 | 3.5 | 51 | 3.5 | 145 |
| SPB560-02 | 2 | 560 | 567 | 4 | 3020 | 75 | - | 44 | 517 | 4 | 76 | 2.8 | 145 |
| SPB630-02 | 2 | 630 | 637 | 4 | 3020 | 75 | - | 44 | 587 | 4 | 76 | 2.8 | 145 |

# SPB-03

TYPE 2

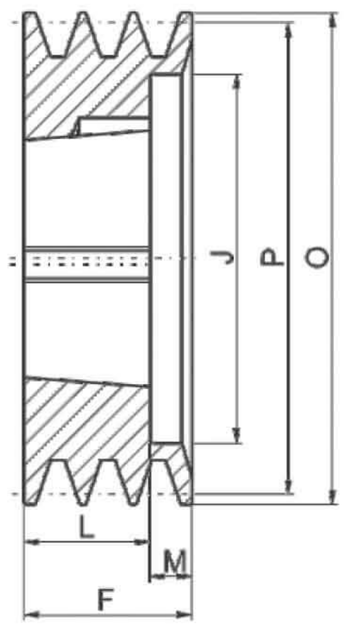


TYPE 4

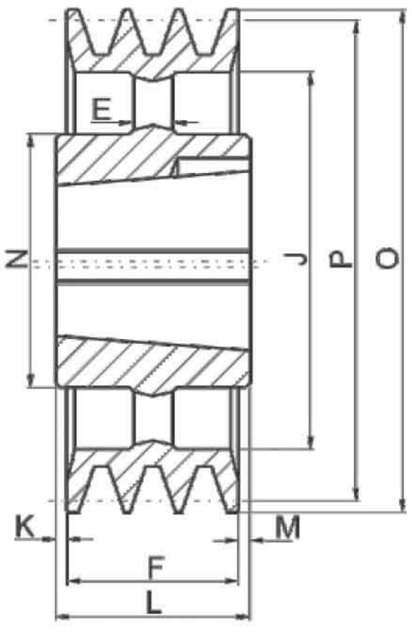


TYPE 5

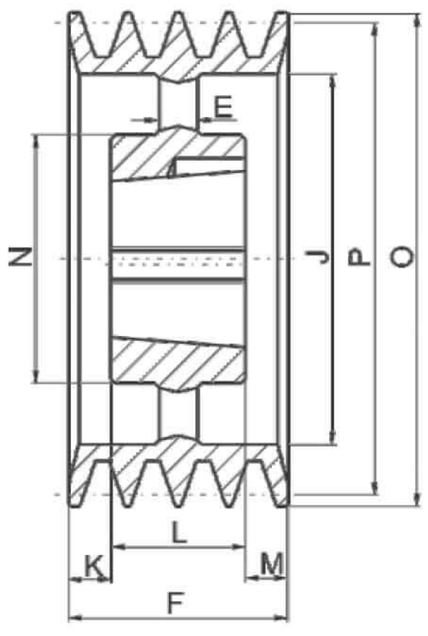


TYPE 6

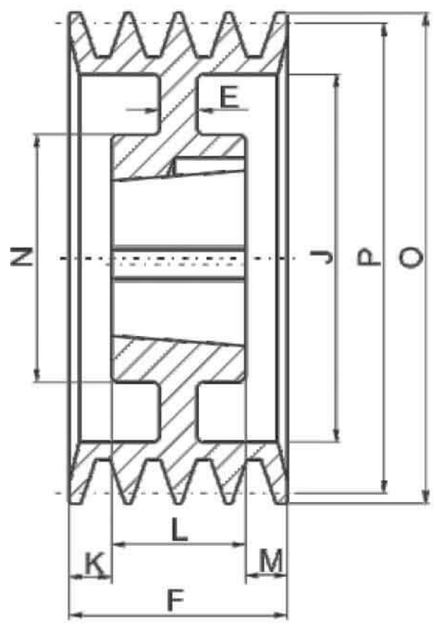


| 型号 | 槽数 | 节圆（P） | 外径（O） | 图例（Type） | 锥套 | 最大孔 | 轮板厚（E） | 轮厚（F） | 止口（J） | K | 孔长（L） | M | 小外圆直径（N） |
|---|---|---|---|---|---|---|---|---|---|---|---|---|---|
| SPB100-03 | 3 | 100 | 107 | 2 | 1610 | 42 | - | 63 | 64 | 19 | 25 | 38 | - |
| SPB106-03 | 3 | 106 | 113 | 2 | 1610 | 42 | - | 63 | 67 | - | 25 | 38 | - |
| SPB112-03 | 3 | 112 | 119 | 2 | 1610 | 42 | - | 63 | 72 | - | 25 | 38 | - |
| SPB118-03 | 3 | 118 | 125 | 2 | 1610 | 42 | - | 63 | 78 | - | 25 | 38 | - |
| SPB125-03 | 3 | 125 | 132 | 2 | 2012 | 50 | - | 63 | 84 | - | 32 | 31 | - |
| SPB132-03 | 3 | 132 | 139 | 2 | 2012 | 50 | - | 63 | 91 | - | 32 | 31 | - |
| SPB140-03 | 3 | 140 | 147 | 2 | 2012 | 50 | - | 63 | 99 | - | 32 | 31 | - |
| SPB150-03 | 3 | 150 | 157 | 2 | 2517 | 60 | - | 63 | 109 | - | 45 | 18 | - |
| SPB160-03 | 3 | 160 | 167 | 2 | 2517 | 60 | - | 63 | 119 | - | 45 | 18 | - |
| SPB170-03 | 3 | 170 | 177 | 2 | 2517 | 60 | - | 63 | 129 | - | 45 | 18 | - |
| SPB180-03 | 3 | 180 | 187 | 2 | 2517 | 60 |  | 63 | 139 | - | 45 | 18 |  |
| SPB190-03 | 3 | 190 | 197 | 2 | 2517 | 60 |  | 63 | 149 | - | 45 | 18 |  |
| SPB200-03 | 3 | 200 | 207 | 2 | 2517 | 60 |  | 63 | 159 | - | 45 | 18 |  |
| SPB212-03 | 3 | 212 | 219 | 6 | 2517 | 60 | 12 | 63 | 171 | - | 45 | 18 | 120 |
| SPB224-03 | 3 | 224 | 231 | 6 | 2517 | 60 | 12 | 63 | 183 |  | 45 | 18 | 120 |
| SPB236-03 | 3 | 236 | 243 | 6 | 2517 | 60 | 12 | 63 | 195 |  | 45 | 18 | 120 |
| SPB250-03 | 3 | 250 | 257 | 6 | 3020 | 75 | 12 | 63 | 209 |  | 51 | 12 | 145 |
| SPB280-03 | 3 | 280 | 287 | 5 | 3020 | 75 | 13 | 63 | 239 | 6 | 51 | 6 | 145 |
| SPB300-03 | 3 | 300 | 307 | 5 | 3020 | 75 | 13 | 63 | 259 | 6 | 51 | 6 | 145 |
| SPB315-03 | 3 | 315 | 322 | 5 | 3020 | 75 | 13 | 63 | 274 | 6 | 51 | 6 | 145 |
| SPB335-03 | 3 | 335 | 342 | 5 | 3020 | 75 | 13 | 63 | 294 | 6 | 51 | 6 | 145 |
| SPB355-03 | 3 | 355 | 362 | 5 | 3020 | 75 | - | 63 | 314 | 6 | 51 | 6 | 145 |
| SPB400-03 | 3 | 400 | 407 | 4 | 3535 | 90 | - | 63 | 359 | 13 | 89 | 13 | 170 |
| SPB450-03 | 3 | 450 | 457 | 4 | 3535 | 90 | - | 63 | 407 | - | 89 | 26 | 170 |
| SPB500-03 | 3 | 500 | 507 | 4 | 3535 | 90 | - | 63 | 457 | - | 89 | 26 | 170 |
| SPB560-03 | 3 | 560 | 567 | 4 | 3535 | 90 | - | 63 | 517 | - | 89 | 26 | 170 |
| SPB630-03 | 3 | 630 | 637 | 4 | 3535 | 90 | - | 63 | 587 | - | 89 | 26 | 170 |
| SPB710-03 | 3 | 710 | 717 | 4 | 3535 | 90 | - | 63 | 664 | 4 | 89 | 22 | 170 |
| SPB800-03 | 3 | 800 | 807 | 4 | 3535 | 90 | - | 63 | 754 | 4 | 89 | 22 | 170 |
| SPB900-03 | 3 | 900 | 907 | 4 | 3535 | 90 | - | 63 | 854 | 4 | 89 | 22 | 170 |
| SPB1000-03 | 3 | 1000 | 1007 | 4 | 4040 | 100 | - | 63 | 954 | 6 | 102 | 33 | 200 |
| SPB1250-03 | 3 | 1250 | 1257 | 4 | 4040 | 100 |  | 63 | 1204 | 6 | 102 | 33 | 200 |

# 锥套式皮带轮
Cone sleeve type belt pulley

# SPB-04

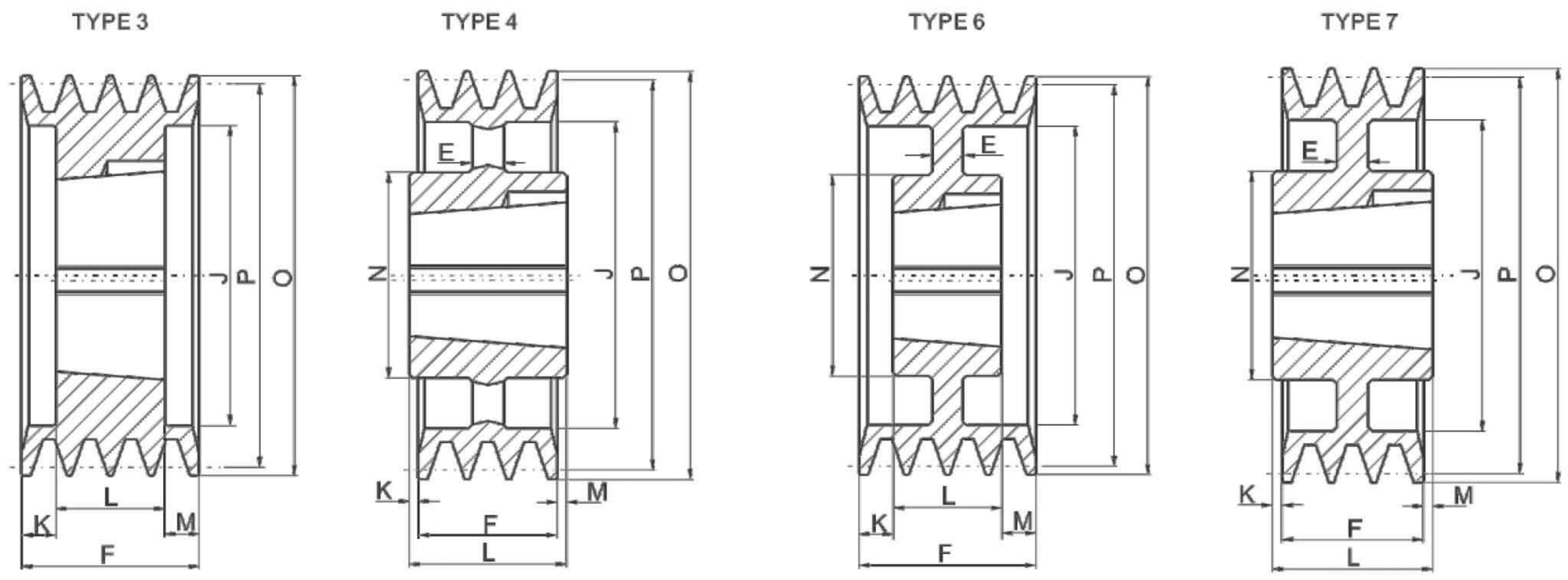


| 型号 | 槽数 | 节圆（P） | 外径（O） | 图例（Type） | 锥套 | 最大孔 | 轮板厚（E） | 轮厚（F） | 止口（J） | K | 孔长（L） | M | 小外圆直径（N） |
|---|---|---|---|---|---|---|---|---|---|---|---|---|---|
| SPB125-04 | 4 | 125 | 132 | 3 | 2012 | 50 | - | 82 | 84 | 25 | 32 | 25 | - |
| SPB132-04 | 4 | 132 | 139 | 3 | 2012 | 50 | - | 82 | 91 | 25 | 32 | 25 | - |
| SPB140-04 | 4 | 140 | 147 | 3 | 2517 | 50 | - | 82 | 99 | 18.5 | 45 | 18.5 | - |
| SPB150-04 | 4 | 150 | 157 | 3 | 2517 | 60 | - | 82 | 109 | 18.5 | 45 | 18.5 | - |
| SPB160-04 | 4 | 160 | 167 | 3 | 2517 | 60 | - | 82 | 119 | 18.5 | 45 | 18.5 | - |
| SPB170-04 | 4 | 170 | 177 | 3 | 2517 | 60 | - | 82 | 129 | 18.5 | 45 | 18.5 | - |
| SPB180-04 | 4 | 180 | 187 | 3 | 2517 | 60 |  | 82 | 139 | 18.5 | 45 | 18.5 |  |
| SPB190-04 | 4 | 190 | 197 | 3 | 2517 | 60 |  | 82 | 149 | 18.5 | 45 | 18.5 |  |
| SPB200-04 | 4 | 200 | 207 | 3 | 3020 | 60 |  | 82 | 159 | 15.5 | 51 | 15.5 |  |
| SPB212-04 | 4 | 212 | 219 | 3 | 3020 | 60 |  | 82 | 171 | 15.5 | 51 | 15.5 |  |
| SPB224-04 | 4 | 224 | 231 | 6 | 3020 | 60 |  | 82 | 183 | 15.5 | 51 | 15.5 | 145 |
| SPB236-04 | 4 | 236 | 243 | 6 | 3020 | 60 |  | 82 | 195 | 15.5 | 51 | 15.5 | 145 |
| SPB250-04 | 4 | 250 | 257 | 6 | 3020 | 75 | 14 | 82 | 209 | 15.5 | 51 | 15.5 | 145 |
| SPB280-04 | 4 | 280 | 287 | 6 | 3020 | 75 | 16 | 82 | 239 | 15.5 | 51 | 15.5 | 145 |
| SPB300-04 | 4 | 300 | 307 | 6 | 3020 | 75 | 16 | 82 | 259 | 15.5 | 51 | 15.5 | 145 |
| SPB315-04 | 4 | 315 | 322 | 7 | 3535 | 75 | 16 | 82 | 274 | 3.5 | 89 | 3.5 | 170 |
| SPB335-04 | 4 | 335 | 342 | 7 | 3535 | 75 | 16 | 82 | 294 | 3.5 | 89 | 3.5 | 170 |
| SPB355-04 | 4 | 355 | 362 | 7 | 3535 | 75 | 16 | 82 | 314 | 3.5 | 89 | 3.5 | 170 |
| SPB400-04 | 4 | 400 | 407 | 4 | 3535 | 90 | - | 82 | 359 | 3.5 | 89 | 3.5 | 170 |
| SPB450-04 | 4 | 450 | 457 | 4 | 3535 | 90 | - | 82 | 407 | - | 89 | 7 | 170 |
| SPB500-04 | 4 | 500 | 507 | 4 | 3535 | 90 | - | 82 | 457 | - | 89 | 7 | 170 |
| SPB560-04 | 4 | 560 | 567 | 4 | 3535 | 90 | - | 82 | 517 | - | 89 | 7 | 170 |
| SPB630-04 | 4 | 630 | 637 | 4 | 3535 | 90 | - | 82 | 587 | - | 89 | 7 | 170 |
| SPB710-04 | 4 | 710 | 717 | 4 | 3535 | 90 | - | 82 | 664 | 3.5 | 89 | 3.5 | 170 |
| SPB800-04 | 4 | 800 | 807 | 4 | 4040 | 90 | - | 82 | 754 | 4 | 102 | 16 | 200 |
| SPB900-04 | 4 | 900 | 907 | 4 | 4040 | 90 | - | 82 | 854 | 4 | 102 | 16 | 200 |
| SPB1000-04 | 4 | 1000 | 1007 | 4 | 4040 | 100 | - | 82 | 954 | 4 | 102 | 16 | 200 |
| SPB1250-04 | 4 | 1250 | 1257 | 4 | 4040 | 100 |  | 82 | 1204 | 6 | 114 | 26 | 225 |

# SPB-05

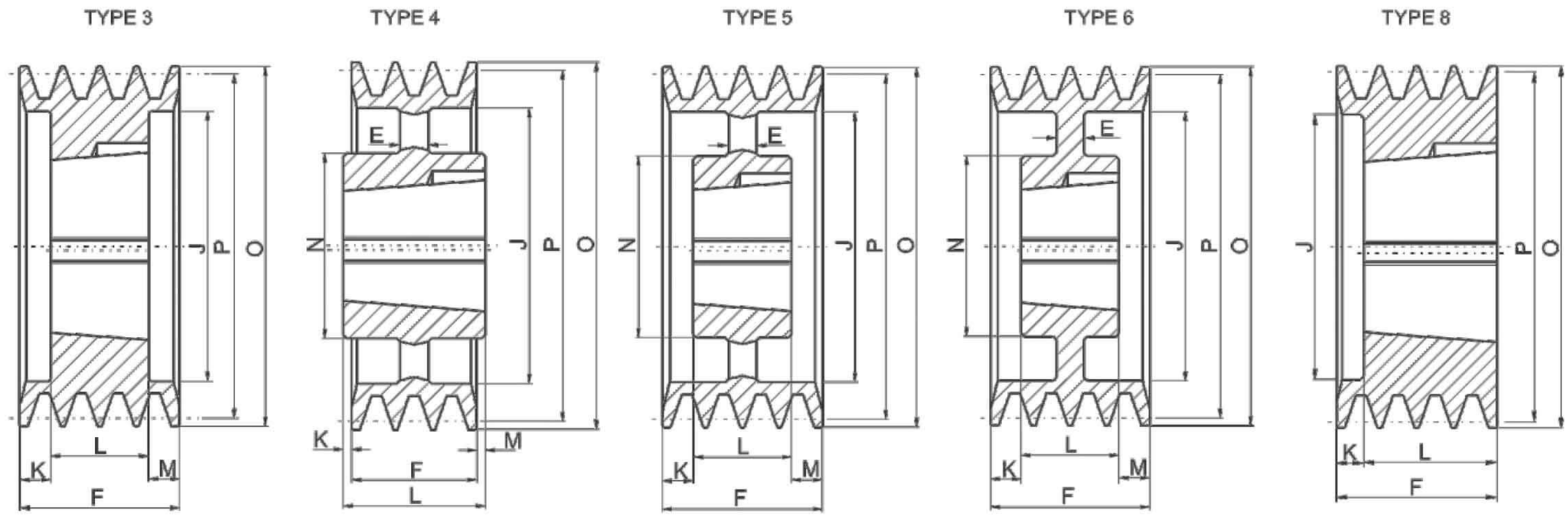


| 型号 | 槽数 | 节圆（P） | 外径（O） | 图例（Type） | 锥套 | 最大孔 | 轮板厚（E） | 轮厚（F） | 止口（J） | K | 孔长（L） | M | 小外圆直径（N） |
|---|---|---|---|---|---|---|---|---|---|---|---|---|---|
| SPB125-05 | 5 | 125 | 132 | 8 | 2012 | 50 | - | 101 | 84 | 69 | 32 | - | - |
| SPB132-05 | 5 | 132 | 139 | 8 | 2517 | 60 | - | 101 | 91 | 56 | 45 | - | - |
| SPB140-05 | 5 | 140 | 147 | 3 | 2517 | 60 | - | 101 | 99 | 28 | 45 | 28 | - |
| SPB150-05 | 5 | 150 | 157 | 3 | 2517 | 60 | - | 101 | 109 | 28 | 45 | 28 | - |
| SPB160-05 | 5 | 160 | 167 | 3 | 2517 | 60 | - | 101 | 119 | 28 | 45 | 28 | - |
| SPB170-05 | 5 | 170 | 177 | 3 | 3020 | 75 | - | 101 | 129 | 25 | 51 | 25 | - |
| SPB180-05 | 5 | 180 | 187 | 3 | 3020 | 75 |  | 101 | 139 | 25 | 51 | 25 |  |
| SPB190-05 | 5 | 190 | 197 | 3 | 3020 | 75 |  | 101 | 149 | 25 | 51 | 25 |  |
| SPB200-05 | 5 | 200 | 207 | 3 | 3020 | 75 |  | 101 | 159 | 25 | 51 | 25 |  |
| SPB212-05 | 5 | 212 | 219 | 3 | 3020 | 75 |  | 101 | 171 | 25 | 51 | 25 |  |
| SPB224-05 | 5 | 224 | 231 | 3 | 3020 | 75 |  | 101 | 183 | 25 | 51 | 28 |  |
| SPB236-05 | 5 | 236 | 243 | 3 | 3535 | 90 |  | 101 | 195 | 6 | 89 | 6 |  |
| SPB250-05 | 5 | 250 | 257 | 3 | 3535 | 90 |  | 101 | 209 | 6 | 89 | 6 |  |
| SPB280-05 | 5 | 280 | 287 | 6 | 3535 | 90 | 18 | 101 | 239 | 6 | 89 | 6 | 170 |
| SPB300-05 | 5 | 300 | 307 | 6 | 3535 | 90 | 18 | 101 | 259 | 6 | 89 | 6 | 170 |
| SPB315-05 | 5 | 315 | 322 | 6 | 3535 | 90 | 18 | 101 | 274 | 6 | 89 | 6 | 170 |
| SPB335-05 | 5 | 335 | 342 | 6 | 3535 | 90 | 18 | 101 | 294 | 6 | 89 | 6 | 170 |
| SPB355-05 | 5 | 355 | 362 | 5 | 3535 | 90 |  | 101 | 314 | 6 | 89 | 6 | 170 |
| SPB400-05 | 5 | 400 | 407 | 5 | 3535 | 90 | - | 101 | 357 | 6 | 89 | 6 | 170 |
| SPB450-05 | 5 | 450 | 457 | 5 | 3535 | 90 | - | 101 | 407 | - | 89 | 12 | 170 |
| SPB500-05 | 5 | 500 | 507 | 5 | 3535 | 90 | - | 101 | 457 | - | 89 | 12 | 170 |
| SPB560-05 | 5 | 560 | 567 | 4 | 4040 | 100 | - | 101 | 517 | - | 102 | 1 | 200 |
| SPB630-05 | 5 | 630 | 637 | 4 | 4040 | 100 | - | 101 | 587 | - | 102 | 1 | 200 |
| SPB710-05 | 5 | 710 | 717 | 4 | 4040 | 100 | - | 101 | 664 | 0.5 | 102 | 0.5 | 200 |
| SPB800-05 | 5 | 800 | 807 | 4 | 4040 | 100 | - | 101 | 754 | 0.5 | 102 | 0.5 | 200 |
| SPB900-05 | 5 | 900 | 907 | 4 | 4545 | 110 | - | 101 | 854 | 6.5 | 114 | 6.5 | 225 |
| SPB1000-05 | 5 | 1000 | 1007 | 4 | 4545 | 110 | - | 101 | 954 | 6.5 | 114 | 6.5 | 225 |
| SPB1250-05 | 5 | 1250 | 1257 | 4 | 4545 | 110 |  | 101 | 1204 | 6.5 | 114 | 6.5 | 225 |

# 锥套式皮带轮

Cone sleeve type belt pulley

# SPB-06

TYPE 3

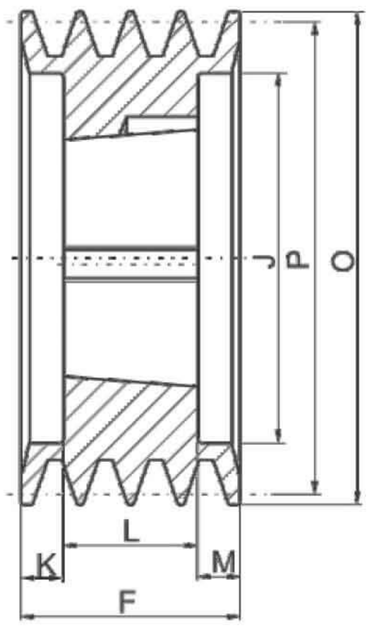


TYPE 4

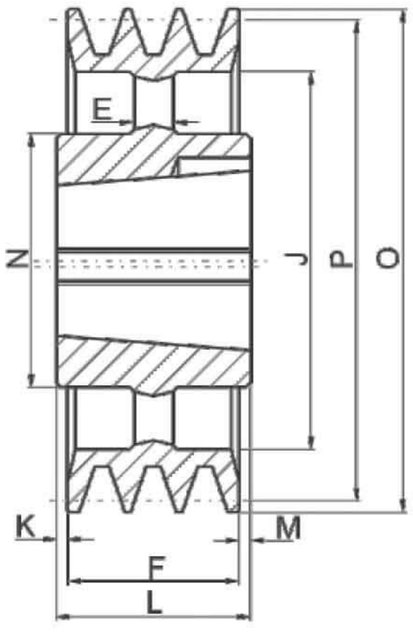


TYPE 5

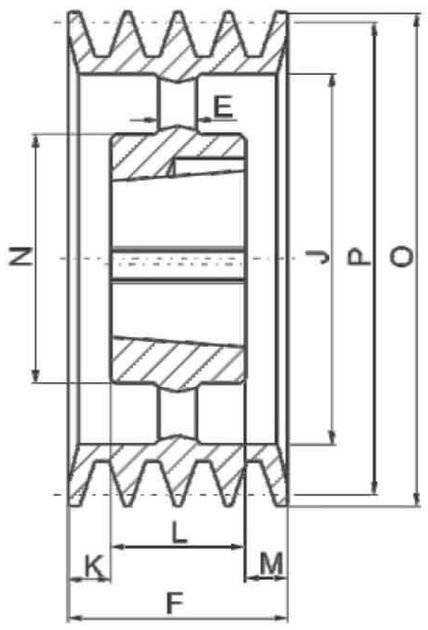


TYPE 6

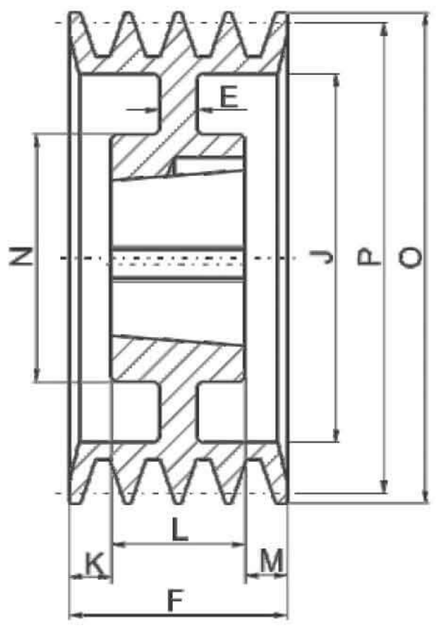


| 型号 | 槽数 | 节圆（P） | 外径（O） | 图例（Type） | 锥套 | 最大孔 | 轮板厚（E） | 轮厚（F） | 止口（J） | K | 孔长（L） | M | 小外圆直径（N） |
|---|---|---|---|---|---|---|---|---|---|---|---|---|---|
| SPB140-06 | 6 | 140 | 147 | 3 | 2517 | 60 | - | 120 | 99 | 37.5 | 45 | 37.5 | - |
| SPB150-06 | 6 | 150 | 157 | 3 | 2517 | 60 | - | 120 | 109 | 37.5 | 45 | 37.5 | - |
| SPB160-06 | 6 | 160 | 167 | 3 | 3020 | 75 | - | 120 | 119 | 34.5 | 51 | 34.5 | - |
| SPB170-06 | 6 | 170 | 177 | 3 | 3020 | 75 | - | 120 | 129 | 34.5 | 51 | 34.5 | - |
| SPB180-06 | 6 | 180 | 187 | 3 | 3020 | 75 |  | 120 | 139 | 34.5 | 51 | 34.5 |  |
| SPB190-06 | 6 | 190 | 197 | 3 | 3020 | 75 |  | 120 | 149 | 34.5 | 51 | 34.5 |  |
| SPB200-06 | 6 | 200 | 207 | 3 | 3020 | 75 |  | 120 | 159 | 34.5 | 51 | 34.5 |  |
| SPB212-06 | 6 | 212 | 219 | 3 | 3535 | 90 |  | 120 | 171 | 15.5 | 89 | 15.5 |  |
| SPB224-06 | 6 | 224 | 231 | 3 | 3535 | 90 |  | 120 | 183 | 15.5 | 89 | 15.5 |  |
| SPB236-06 | 6 | 236 | 243 | 3 | 3535 | 90 |  | 120 | 195 | 15.5 | 89 | 15.5 |  |
| SPB250-06 | 6 | 250 | 257 | 3 | 3535 | 90 |  | 120 | 209 | 15.5 | 89 | 15.5 |  |
| SPB280-06 | 6 | 280 | 287 | 6 | 3535 | 90 | 18 | 120 | 239 | 15.5 | 89 | 15.5 | 170 |
| SPB300-06 | 6 | 300 | 307 | 6 | 3535 | 90 | 18 | 120 | 259 | 15.5 | 89 | 15.5 | 170 |
| SPB315-06 | 6 | 315 | 322 | 6 | 3535 | 90 | 18 | 120 | 274 | 15.5 | 89 | 15.5 | 170 |
| SPB335-06 | 6 | 335 | 342 | 6 | 3535 | 90 | 18 | 120 | 294 | 15.5 | 89 | 15.5 | 170 |
| SPB355-06 | 6 | 355 | 362 | 6 | 3535 | 90 | 18 | 120 | 314 | 15.5 | 89 | 15.5 | 170 |
| SPB400-06 | 6 | 400 | 407 | 5 | 3535 | 90 | - | 120 | 357 | 15.5 | 89 | 15.5 | 170 |
| SPB450-06 | 6 | 450 | 457 | 5 | 4040 | 100 | - | 120 | 407 | - | 102 | 18 | 200 |
| SPB500-06 | 6 | 500 | 507 | 5 | 4040 | 100 | - | 120 | 457 | - | 102 | 18 | 200 |
| SPB560-06 | 6 | 560 | 567 | 5 | 4040 | 100 | - | 120 | 517 | - | 102 | 18 | 200 |
| SPB630-06 | 6 | 630 | 637 | 5 | 4040 | 100 | - | 120 | 587 | - | 102 | 18 | 200 |
| SPB710-06 | 6 | 710 | 717 | 5 | 4040 | 100 | - | 120 | 664 | 9 | 102 | 9 | 200 |
| SPB800-06 | 6 | 800 | 807 | 5 | 4545 | 110 | - | 120 | 754 | 3 | 114 | 3 | 225 |
| SPB900-06 | 6 | 900 | 907 | 5 | 4545 | 110 | - | 120 | 854 | 3 | 114 | 3 | 225 |
| SPB1000-06 | 6 | 1000 | 1007 | 5 | 4545 | 110 | - | 120 | 954 | 3 | 114 | 3 | 225 |
| SPB1250-06 | 6 | 1250 | 1257 | 4 | 4545 | 110 |  | 120 | 1204 | 3.5 | 114 | 3.5 | 245 |

# SPB-08

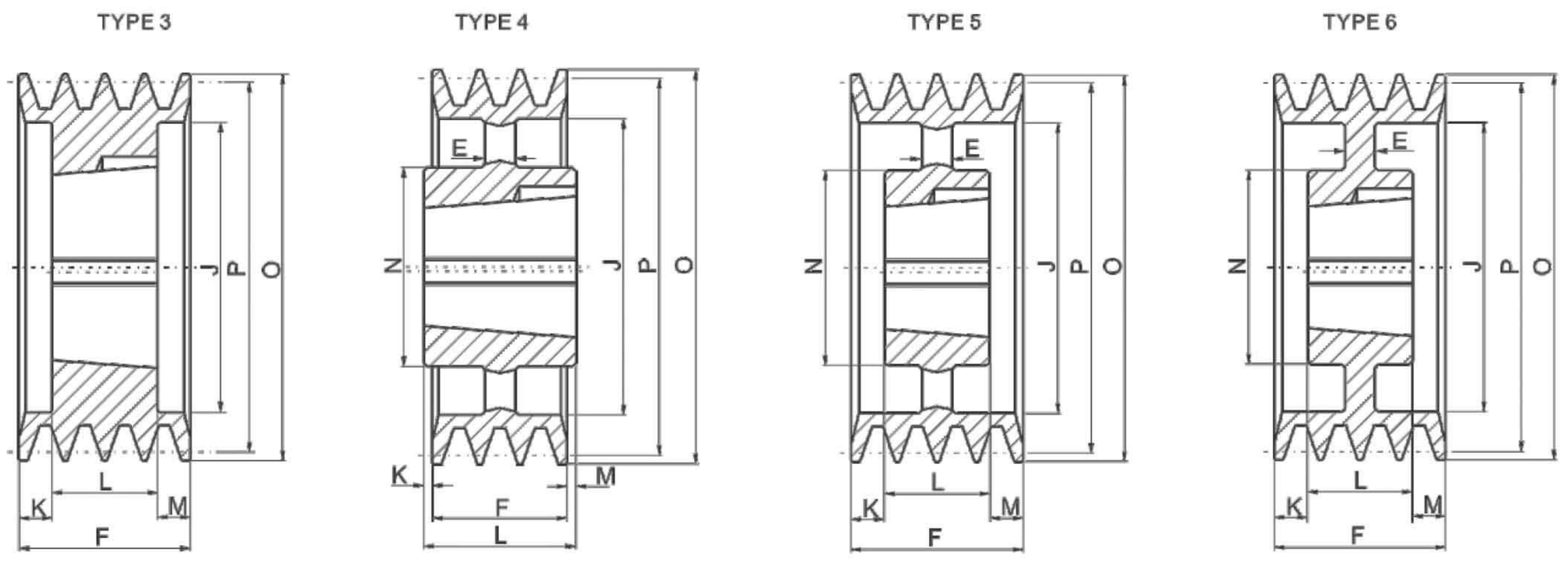


| 型号 | 槽数 | 节圆（P） | 外径（O） | 图例（Type） | 锥套 | 最大孔 | 轮板厚（E） | 轮厚（F） | 止口（J） | K | 孔长（L） | M | 小外圆直径（N） |
|---|---|---|---|---|---|---|---|---|---|---|---|---|---|
| SPB140-08 | 8 | 140 | 147 | 3 | 2517 | 60 | - | 158 | 97 | 56.5 | 45 | 56.5 | - |
| SPB160-08 | 8 | 160 | 167 | 3 | 3020 | 75 | - | 158 | 117 | 53.5 | 76 | 53.5 | - |
| SPB170-08 | 8 | 170 | 177 | 3 | 3030 | 75 | - | 158 | 127 | 41 | 76 | 41 | - |
| SPB180-08 | 8 | 180 | 187 | 3 | 3030 | 75 |  | 158 | 137 | 41 | 76 | 41 |  |
| SPB190-08 | 8 | 190 | 197 | 3 | 3030 | 75 |  | 158 | 147 | 41 | 76 | 41 |  |
| SPB200-08 | 8 | 200 | 207 | 3 | 3535 | 90 |  | 158 | 157 | 34.5 | 89 | 34.5 |  |
| SPB212-08 | 8 | 212 | 219 | 3 | 3535 | 90 |  | 158 | 169 | 34.5 | 89 | 34.5 |  |
| SPB224-08 | 8 | 224 | 231 | 3 | 3535 | 90 |  | 158 | 181 | 34.5 | 89 | 34.5 |  |
| SPB236-08 | 8 | 236 | 243 | 3 | 3535 | 90 |  | 158 | 193 | 34.5 | 89 | 34.5 |  |
| SPB250-08 | 8 | 250 | 257 | 3 | 3535 | 90 |  | 158 | 207 | 34.5 | 89 | 34.5 |  |
| SPB280-08 | 8 | 280 | 287 | 3 | 3535 | 90 | - | 158 | 237 | 34.5 | 89 | 34.5 |  |
| SPB300-08 | 8 | 300 | 307 | 6 | 3535 | 90 | 20 | 158 | 257 | 34.5 | 89 | 34.5 | 170 |
| SPB315-08 | 8 | 315 | 322 | 6 | 3535 | 90 | 18 | 158 | 272 | 34.5 | 89 | 34.5 | 170 |
| SPB335-08 | 8 | 335 | 342 | 6 | 3535 | 90 | 18 | 158 | 292 | 34.5 | 89 | 34.5 | 170 |
| SPB355-08 | 8 | 355 | 362 | 6 | 3535 | 90 | 18 | 158 | 312 | 34.5 | 89 | 34.5 | 170 |
| SPB400-08 | 8 | 400 | 407 | 6 | 4040 | 100 | - | 158 | 357 | 28 | 102 | 28 | 200 |
| SPB450-08 | 8 | 450 | 457 | 5 | 4040 | 100 | - | 158 | 407 | 28 | 102 | 28 | 200 |
| SPB500-08 | 8 | 500 | 507 | 5 | 4040 | 100 | - | 158 | 457 | 28 | 102 | 28 | 200 |
| SPB560-08 | 8 | 560 | 567 | 5 | 4545 | 110 | - | 158 | 517 | 22 | 114 | 22 | 225 |
| SPB630-08 | 8 | 630 | 637 | 5 | 4545 | 110 | - | 158 | 587 | 22 | 114 | 22 | 225 |
| SPB710-08 | 8 | 710 | 717 | 5 | 4545 | 110 | - | 158 | 664 | 22 | 114 | 22 | 225 |
| SPB800-08 | 8 | 800 | 807 | 5 | 4545 | 110 | - | 158 | 754 | 22 | 114 | 22 | 225 |
| SPB900-08 | 8 | 900 | 907 | 5 | 4545 | 110 | - | 158 | 854 | 22 | 114 | 22 | 225 |
| SPB1000-08 | 8 | 1000 | 1007 | 5 | 5050 | 125 | - | 158 | 954 | 15.5 | 127 | 15.5 | 245 |
| SPB1250-08 | 8 | 1250 | 1257 | 5 | 5050 | 125 |  | 158 | 1204 | 15.5 | 127 | 15.5 | 245 |

# 锥套式皮带轮
Cone sleeve type belt pulley

# SPB-10

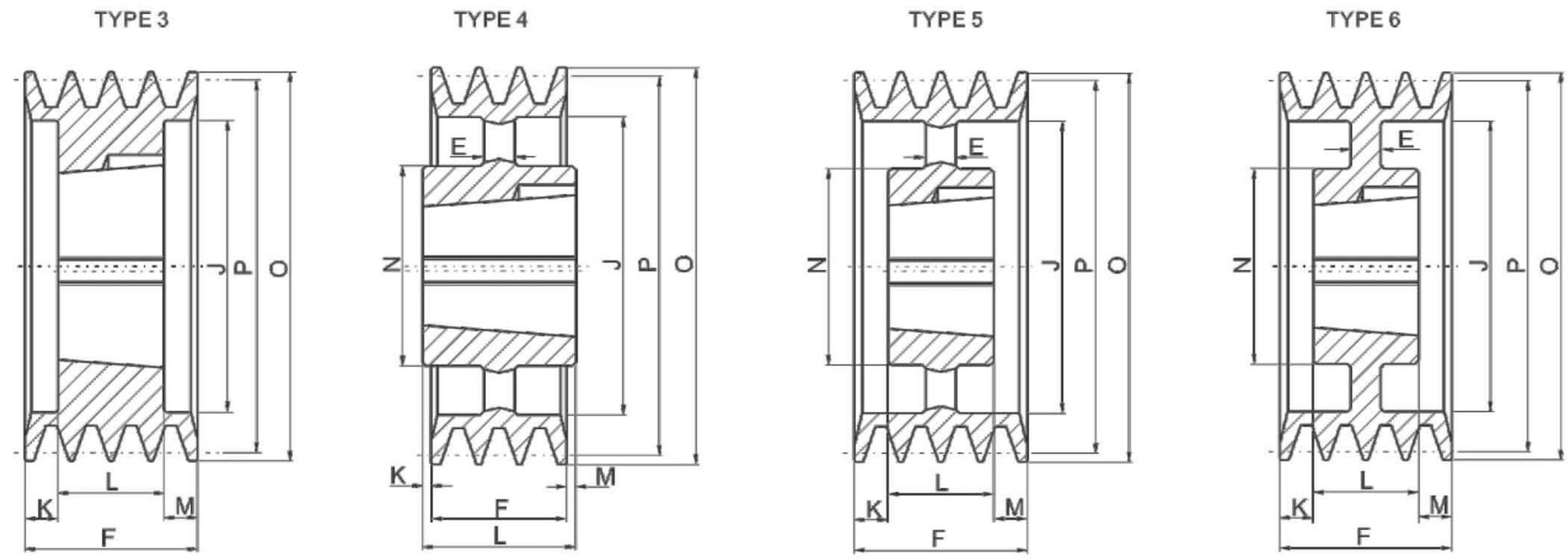


| 型号 | 槽数 | 节圆（P） | 外径（O） | 图例（Type） | 锥套 | 最大孔 | 轮板厚（E） | 轮厚（F） | 止口（J） | K | 孔长（L） | M | 小外圆直径（N） |
|---|---|---|---|---|---|---|---|---|---|---|---|---|---|
| SPB224-10 | 10 | 224 | 231 | 3 | 3535 | 90 | | 196 | 181 | 53.5 | 89 | 53.5 | |
| SPB236-10 | 10 | 236 | 243 | 3 | 3535 | 90 | | 196 | 193 | 53.5 | 89 | 53.5 | |
| SPB250-10 | 10 | 250 | 257 | 3 | 3535 | 90 | | 196 | 207 | 53.5 | 89 | 53.5 | |
| SPB280-10 | 10 | 280 | 287 | 3 | 3535 | 90 | - | 196 | 237 | 53.5 | 89 | 53.5 | |
| SPB315-10 | 10 | 315 | 322 | 6 | 3535 | 90 | 18 | 196 | 272 | 53.5 | 89 | 53.5 | 170 |
| SPB335-10 | 10 | 335 | 342 | 6 | 4040 | 100 | 20 | 196 | 292 | 47 | 102 | 47 | 200 |
| SPB355-10 | 10 | 355 | 362 | 6 | 4040 | 100 | 20 | 196 | 312 | 47 | 102 | 47 | 200 |
| SPB400-10 | 10 | 400 | 407 | 5 | 4040 | 100 | - | 196 | 357 | 47 | 102 | 47 | 200 |
| SPB450-10 | 10 | 450 | 457 | 5 | 4545 | 110 | - | 196 | 407 | 41 | 114 | 41 | 225 |
| SPB500-10 | 10 | 500 | 507 | 5 | 4545 | 110 | - | 196 | 457 | 41 | 114 | 41 | 225 |
| SPB560-10 | 10 | 560 | 567 | 5 | 4545 | 110 | - | 196 | 517 | 41 | 114 | 41 | 225 |
| SPB630-10 | 10 | 630 | 637 | 5 | 4545 | 110 | - | 196 | 587 | 41 | 114 | 41 | 225 |
| SPB710-10 | 10 | 710 | 717 | 5 | 4545 | 110 | - | 196 | 664 | 41 | 114 | 41 | 225 |
| SPB800-10 | 10 | 800 | 807 | 5 | 4545 | 110 | - | 196 | 754 | 41 | 114 | 41 | 225 |
| SPB900-10 | 10 | 900 | 907 | 5 | 5050 | 125 | - | 196 | 854 | 34.5 | 127 | 34.5 | 245 |
| SPB1000-10 | 10 | 1000 | 1007 | 5 | 5050 | 125 | - | 196 | 954 | 34.5 | 127 | 34.5 | 245 |

# SPC-03

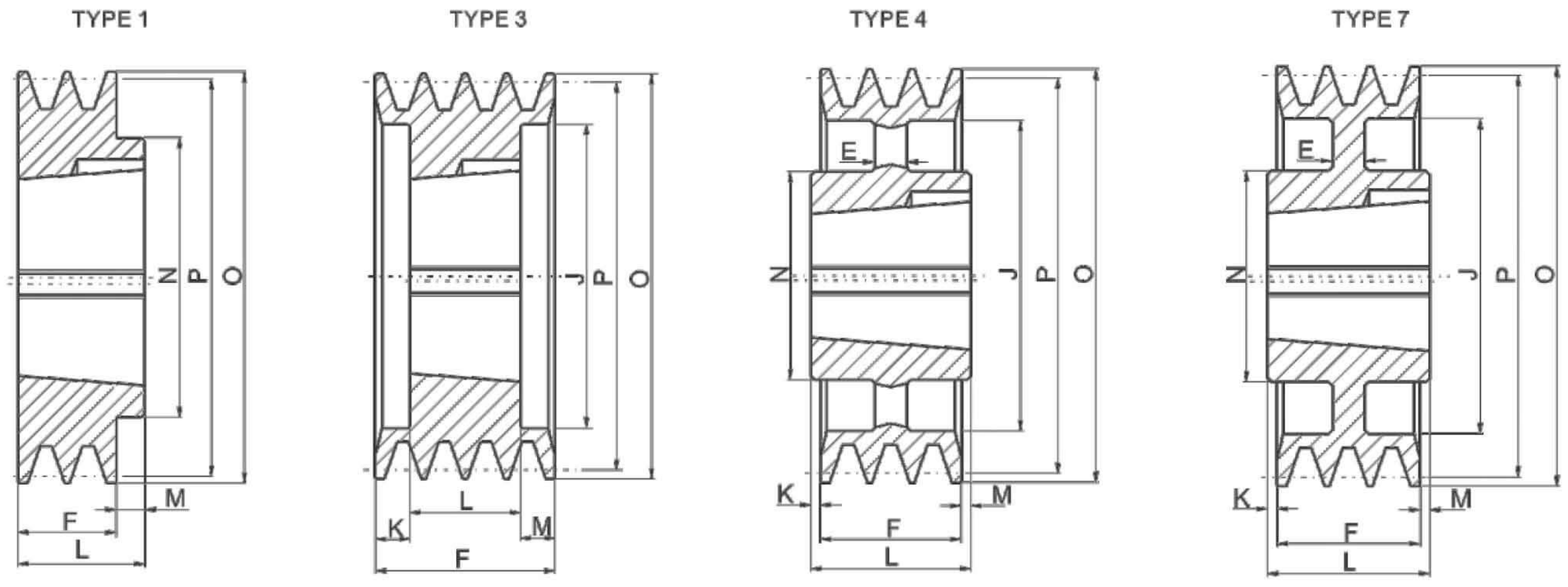


| 型号 | 槽数 | 节圆（P） | 外径（O） | 图例（Type） | 锥套 | 最大孔 | E | 轮厚（F） | 止口（J） | K | 孔长（L） | M | 小外圆直径（N） |
|---|---|---|---|---|---|---|---|---|---|---|---|---|---|
| SPC 200-03 | 3 | 200 | 209.6 | 3 | 2517 | 60 | - | 85 | 150 | 20 | 45 | 20 | - |
| SPC 212-03 | 3 | 212 | 221.6 | 3 | 3020 | 75 | - | 85 | 162 | 17 | 51 | 17 | - |
| SPC 224-03 | 3 | 224 | 233.6 | 3 | 3020 | 75 | - | 85 | 173 | 17 | 51 | 17 | - |
| SPC 236-03 | 3 | 236 | 245.6 | 6 | 3020 | 75 | - | 85 | 185 | 17 | 51 | 17 | 145 |
| SPC 250-03 | 3 | 250 | 259.6 | 6 | 3020 | 75 | - | 85 | 200 | 17 | 51 | 17 | 145 |
| SPC 265-03 | 3 | 265 | 274.6 | 1 | 3535 | 90 | - | 85 | 213 | - | 89 | 4 | 170 |
| SPC 280-03 | 3 | 280 | 289.6 | 7 | 3535 | 90 | - | 85 | 228 | - | 89 | 4 | 170 |
| SPC 300-03 | 3 | 300 | 309.6 | 7 | 3535 | 90 | 18 | 85 | 249 | 2 | 89 | 2 | 170 |
| SPC 315-03 | 3 | 315 | 324.6 | 7 | 3535 | 90 | 18 | 85 | 264 | 2 | 89 | 2 | 170 |
| SPC 335-03 | 3 | 335 | 344.6 | 7 | 3535 | 90 | 18 | 85 | 284 | 2 | 89 | 2 | 170 |
| SPC 355-03 | 3 | 355 | 364.6 | 7 | 3535 | 90 | 18 | 85 | 304 | 2 | 89 | 2 | 170 |
| SPC 375-03 | 3 | 375 | 384.6 | 4 | 3535 | 90 | 20 | 85 | 324 | 2 | 89 | 2 | 170 |
| SPC 400-03 | 3 | 400 | 409.6 | 4 | 3535 | 90 | - | 85 | 344 | 2 | 89 | 2 | 170 |
| SPC 425-03 | 3 | 425 | 434.6 | 4 | 3535 | 90 | - | 85 | 369 | 2 | 89 | 2 | 170 |
| SPC 450-03 | 3 | 450 | 459.6 | 4 | 3535 | 90 | - | 85 | 394 | 2 | 89 | 2 | 170 |
| SPC 475-03 | 3 | 475 | 484.6 | 4 | 3535 | 90 | - | 85 | 419 | 2 | 89 | 2 | 170 |
| SPC 500-03 | 3 | 500 | 509.6 | 4 | 3535 | 90 | - | 85 | 444 | 2 | 89 | 2 | 170 |
| SPC 530-03 | 3 | 530 | 539.6 | 4 | 3535 | 90 | - | 85 | 474 | 2 | 89 | 2 | 170 |
| SPC 560-03 | 3 | 560 | 569.6 | 4 | 3535 | 90 | - | 85 | 504 | 2 | 89 | 2 | 170 |
| SPC 630-03 | 3 | 630 | 639.6 | 4 | 4040 | 100 | - | 85 | 574 | 8.5 | 102 | 8.5 | 200 |
| SPC 800-03 | 3 | 800 | 809.6 | 4 | 4545 | 110 | - | 85 | 737 | 4 | 114 | 25 | 225 |
| SPC 1000-03 | 3 | 1000 | 1009.6 | 4 | 5050 | 125 | - | 85 | 937 | 8 | 127 | 34 | 245 |
| SPC 1250-03 | 3 | 1250 | 1259.6 | 4 | 5050 | 125 | - | 85 | 1187 | 8 | 127 | 34 | 245 |

# 锥套式皮带轮
Cone sleeve type belt pulley

# SPC-04

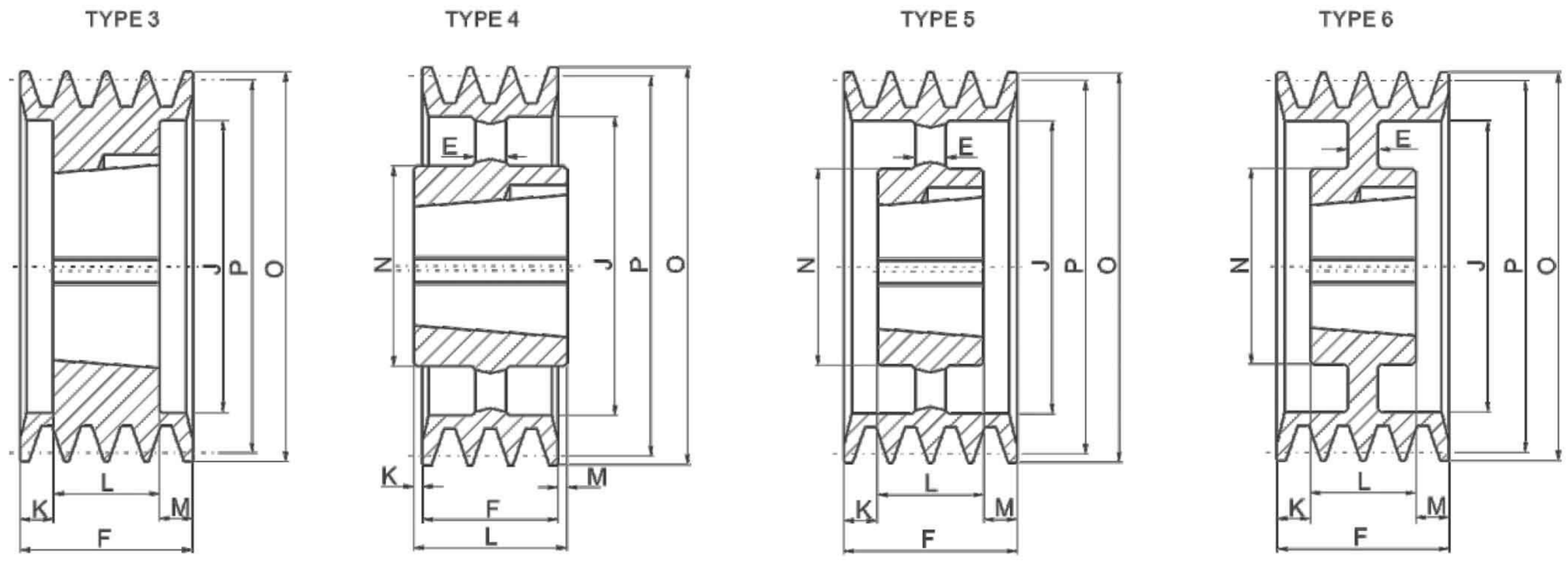


| 型号 | 槽数 | 节圆（P） | 外径（O） | 图例（Type） | 锥套 | 最大孔 | 轮板厚（E） | 轮厚（F） | 止口（J） | K | 孔长（L） | M | 小外圆直径（N） |
|---|---|---|---|---|---|---|---|---|---|---|---|---|---|
| SPC 200-04 | 4 | 200 | 209.6 | 3 | 3020 | 75 | - | 111 | 148 | 30 | 51 | 30 | - |
| SPC 212-04 | 4 | 212 | 221.6 | 3 | 3020 | 75 | - | 111 | 160 | 30 | 51 | 30 | - |
| SPC 224-04 | 4 | 224 | 233.6 | 3 | 3535 | 90 | - | 111 | 172 | 11 | 89 | 11 | - |
| SPC 236-04 | 4 | 236 | 245.6 | 3 | 3535 | 90 | - | 111 | 184 | 11 | 89 | 11 | - |
| SPC 250-04 | 4 | 250 | 259.6 | 3 | 3535 | 90 | - | 111 | 198 | 11 | 89 | 11 | - |
| SPC 265-04 | 4 | 265 | 274.6 | 3 | 3535 | 90 | - | 111 | 213 | 11 | 89 | 11 | - |
| SPC 280-04 | 4 | 280 | 289.6 | 6 | 3535 | 90 | - | 111 | 228 | 11 | 89 | 11 | - |
| SPC 300-04 | 4 | 300 | 309.6 | 6 | 3535 | 90 | 20 | 111 | 248 | 11 | 89 | 11 | 170 |
| SPC 315-04 | 4 | 315 | 324.6 | 6 | 3535 | 90 | 20 | 111 | 263 | 11 | 89 | 11 | 170 |
| SPC 335-04 | 4 | 335 | 344.6 | 6 | 3535 | 90 | 20 | 111 | 283 | 11 | 89 | 11 | 170 |
| SPC 355-04 | 4 | 355 | 364.6 | 6 | 3535 | 90 | 20 | 111 | 303 | 11 | 89 | 11 | 170 |
| SPC 375-04 | 4 | 375 | 384.6 | 6 | 3535 | 90 | 25 | 111 | 323 | 11 | 89 | 11 | 170 |
| SPC 400-04 | 4 | 400 | 409.6 | 5 | 3535 | 90 | - | 111 | 344 | 11 | 89 | 11 | 170 |
| SPC 425-04 | 4 | 425 | 434.6 | 5 | 3535 | 90 | - | 111 | 369 | 11 | 89 | 11 | 170 |
| SPC 450-04 | 4 | 450 | 459.6 | 5 | 3535 | 90 | - | 111 | 394 | 11 | 89 | 11 | 170 |
| SPC 475-04 | 4 | 475 | 484.6 | 5 | 3535 | 90 | - | 111 | 419 | 11 | 89 | 11 | 170 |
| SPC 500-04 | 4 | 500 | 509.6 | 5 | 3535 | 90 | - | 111 | 444 | 11 | 89 | 11 | 170 |
| SPC 530-04 | 4 | 530 | 539.6 | 5 | 3535 | 90 | - | 111 | 474 | 11 | 89 | 11 | 170 |
| SPC 560-04 | 4 | 560 | 569.6 | 5 | 4040 | 100 | - | 111 | 504 | 4.5 | 102 | 4.5 | 200 |
| SPC 630-04 | 4 | 630 | 639.6 | 4 | 4545 | 110 | - | 111 | 574 | 1.5 | 114 | 1.5 | 225 |
| SPC 710-04 | 4 | 710 | 719.6 | 4 | 5050 | 125 | - | 111 | 654 | 4 | 127 | 12 | 245 |
| SPC 800-04 | 4 | 800 | 809.6 | 4 | 5050 | 125 | - | 111 | 737 | 4 | 127 | 12 | 245 |
| SPC 1000-04 | 4 | 1000 | 1009.6 | 4 | 5050 | 125 | - | 111 | 937 | 4 | 127 | 12 | 245 |
| SPC 1250-04 | 4 | 1250 | 1259.6 | 4 | 5050 | 125 | - | 111 | 1187 | 4 | 127 | 12 | 245 |

# SPC-05

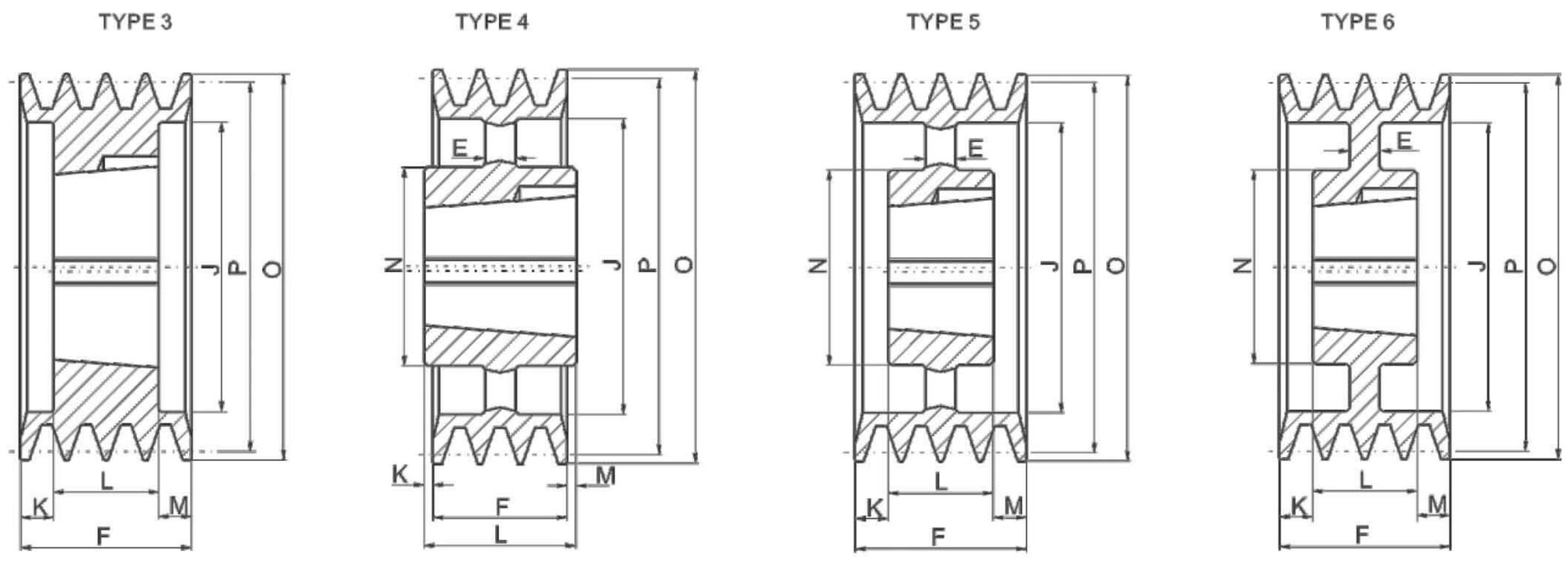


| 型号 | 槽数 | 节圆（P） | 外径（O） | 图例（Type） | 锥套 | 最大孔 | 轮板厚（E） | 轮厚（F） | 止口（J） | K | 孔长（L） | M | 小外圆直径（N） |
|---|---|---|---|---|---|---|---|---|---|---|---|---|---|
| SPC 200-05 | 5 | 200 | 209.6 | 3 | 3535 | 90 | – | 136 | 148 | 23.5 | 89 | 23.5 | – |
| SPC 212-05 | 5 | 212 | 221.6 | 3 | 3535 | 90 | – | 136 | 160 | 23.5 | 89 | 23.5 | – |
| SPC 224-05 | 5 | 224 | 233.6 | 3 | 3535 | 90 | – | 136 | 173 | 23.5 | 89 | 23.5 | – |
| SPC 236-05 | 5 | 236 | 245.6 | 3 | 3535 | 90 | – | 136 | 185 | 23.5 | 89 | 23.5 | – |
| SPC 250-05 | 5 | 250 | 259.6 | 3 | 3535 | 90 | – | 136 | 198 | 23.5 | 89 | 23.5 | – |
| SPC 265-05 | 5 | 265 | 274.6 | 3 | 3535 | 90 | – | 136 | 213 | 23.5 | 89 | 23.5 | – |
| SPC 280-05 | 5 | 280 | 289.6 | 6 | 3535 | 90 | – | 136 | 228 | 23.5 | 89 | 23.5 | – |
| SPC 300-05 | 5 | 300 | 309.6 | 6 | 3535 | 90 | 20 | 136 | 248 | 23.5 | 89 | 23.5 | 170 |
| SPC 315-05 | 5 | 315 | 324.6 | 6 | 3535 | 90 | 20 | 136 | 264 | 23.5 | 89 | 23.5 | 170 |
| SPC 335-05 | 5 | 335 | 344.6 | 6 | 3535 | 90 | 20 | 136 | 283 | 23.5 | 89 | 23.5 | 170 |
| SPC 355-05 | 5 | 355 | 364.6 | 6 | 3535 | 90 | 20 | 136 | 303 | 23.5 | 89 | 23.5 | 170 |
| SPC 375-05 | 5 | 375 | 384.6 | 6 | 3535 | 90 | 20 | 136 | 324 | 23.5 | 89 | 23.5 | 170 |
| SPC 400-05 | 5 | 400 | 409.6 | 5 | 3535 | 90 | – | 136 | 344 | 23.5 | 89 | 23.5 | 170 |
| SPC 425-05 | 5 | 425 | 434.6 | 6 | 4040 | 100 | – | 136 | 369 | 17 | 102 | 17 | 200 |
| SPC 450-05 | 5 | 450 | 459.6 | 5 | 4040 | 100 | – | 136 | 394 | 17 | 102 | 17 | 200 |
| SPC 475-05 | 5 | 475 | 484.6 | 5 | 4040 | 100 | – | 136 | 419 | 17 | 102 | 17 | 200 |
| SPC 500-05 | 5 | 500 | 509.6 | 5 | 4040 | 100 | – | 136 | 444 | 17 | 102 | 17 | 200 |
| SPC 530-05 | 5 | 530 | 539.6 | 5 | 4040 | 100 | – | 136 | 474 | 17 | 102 | 17 | 200 |
| SPC 560-05 | 5 | 560 | 569.6 | 5 | 4545 | 110 | – | 136 | 504 | 11 | 114 | 11 | 225 |
| SPC 630-05 | 5 | 630 | 639.6 | 5 | 5050 | 125 | – | 136 | 574 | 4.5 | 127 | 4.5 | 245 |
| SPC 710-05 | 5 | 710 | 719.6 | 5 | 5050 | 125 | – | 136 | 654 | 4.5 | 127 | 4.5 | 245 |
| SPC 800-05 | 5 | 800 | 809.6 | 5 | 5050 | 125 | – | 136 | 737 | 4.5 | 127 | 4.5 | 245 |
| SPC 1000-05 | 5 | 1000 | 1009.6 | 5 | 5050 | 125 | – | 136 | 937 | 4.5 | 127 | 4.5 | 245 |
| SPC 1250-05 | 5 | 1250 | 1259.6 | 5 | 5050 | 125 | – | 136 | 1187 | 4.5 | 127 | 4.5 | 245 |

# 锥套式皮带轮
Cone sleeve type belt pulley

# SPC-06

TYPE 3

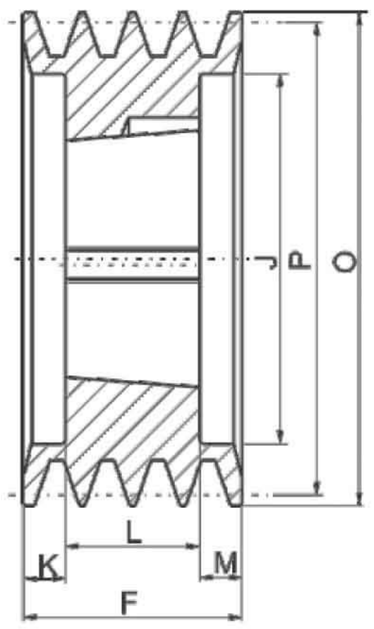


TYPE 4

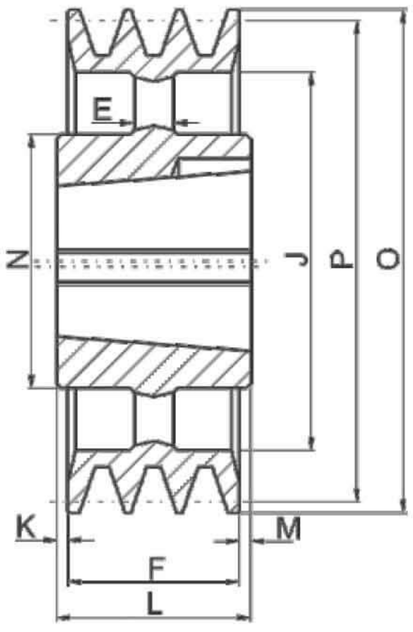


TYPE 5

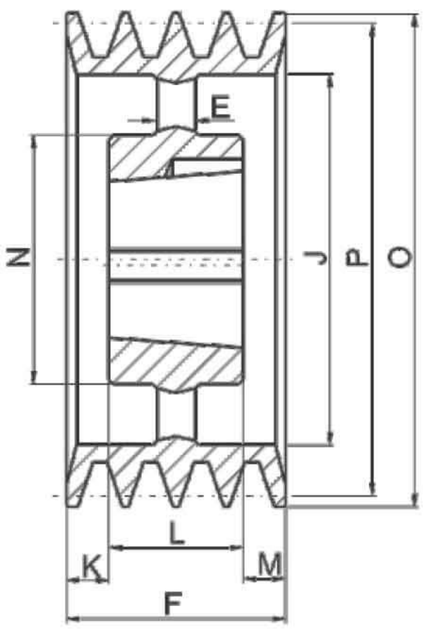


TYPE 6

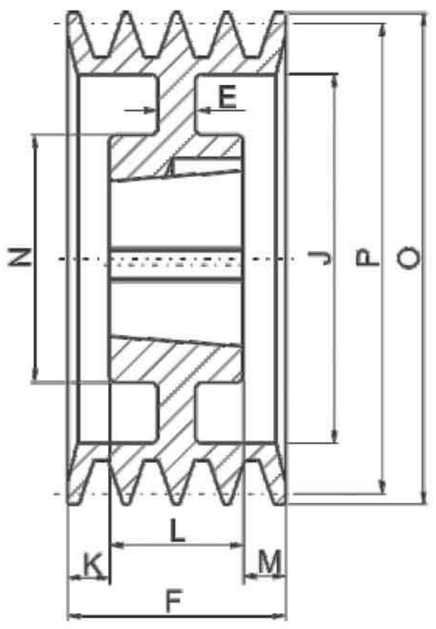


| 型号 | 槽数 | 节圆（P） | 外径（O） | 图例（Type） | 锥套 | 最大孔 | 轮板厚（E） | 轮厚（F） | 止口（J） | K | 孔长（L） | M | 小外圆直径（N） |
|---|---|---|---|---|---|---|---|---|---|---|---|---|---|
| SPC 200-06 | 6 | 200 | 209.6 | 3 | 3535 | 90 | - | 162 | 148 | 36.5 | 89 | 36.5 | - |
| SPC 212-06 | 6 | 212 | 221.6 | 3 | 3535 | 90 | - | 162 | 160 | 36.5 | 89 | 36.5 | - |
| SPC 224-06 | 6 | 224 | 233.6 | 3 | 3535 | 90 | - | 162 | 173 | 36.5 | 89 | 36.5 | - |
| SPC 236-06 | 6 | 236 | 245.6 | 3 | 3535 | 90 | - | 162 | 185 | 36.5 | 89 | 36.5 | - |
| SPC 250-06 | 6 | 250 | 259.6 | 3 | 3535 | 90 | - | 162 | 198 | 36.5 | 89 | 36.5 | - |
| SPC 265-06 | 6 | 265 | 274.6 | 3 | 3535 | 90 | - | 162 | 213 | 36.5 | 89 | 36.5 | - |
| SPC 280-06 | 6 | 280 | 289.6 | 6 | 3535 | 90 | - | 162 | 228 | 36.5 | 89 | 36.5 | - |
| SPC 300-06 | 6 | 300 | 309.6 | 6 | 3535 | 90 | 20 | 162 | 248 | 36.5 | 89 | 36.5 | 170 |
| SPC 315-06 | 6 | 315 | 324.6 | 6 | 3535 | 90 | 20 | 162 | 264 | 36.5 | 89 | 36.5 | 170 |
| SPC 335-06 | 6 | 335 | 344.6 | 6 | 3535 | 90 | 20 | 162 | 283 | 36.5 | 89 | 36.5 | 170 |
| SPC 355-06 | 6 | 355 | 364.6 | 6 | 3535 | 90 | 20 | 162 | 304 | 36.5 | 89 | 36.5 | 170 |
| SPC 375-06 | 6 | 375 | 384.6 | 6 | 4040 | 100 | 20 | 162 | 324 | 30 | 102 | 30 | 200 |
| SPC 400-06 | 6 | 400 | 409.6 | 6 | 4040 | 100 | 20 | 162 | 348 | 30 | 102 | 30 | 200 |
| SPC 425-06 | 6 | 425 | 434.6 | 6 | 4545 | 110 | 30 | 162 | 369 | 24 | 114 | 24 | 225 |
| SPC 450-06 | 6 | 450 | 459.6 | 6 | 4545 | 110 | 30 | 162 | 394 | 24 | 114 | 24 | 225 |
| SPC 475-06 | 6 | 475 | 484.6 | 6 | 4545 | 110 | 30 | 162 | 419 | 24 | 114 | 24 | 225 |
| SPC 500-06 | 6 | 500 | 509.6 | 5 | 4545 | 110 | 30 | 162 | 444 | 24 | 114 | 24 | 225 |
| SPC 530-06 | 6 | 530 | 539.6 | 5 | 4545 | 110 | 30 | 162 | 474 | 24 | 114 | 24 | 225 |
| SPC 560-06 | 6 | 560 | 569.6 | 5 | 5050 | 125 | - | 162 | 504 | 17.5 | 127 | 17.5 | 245 |
| SPC 630-06 | 6 | 630 | 639.6 | 5 | 5050 | 125 | - | 162 | 574 | 17.5 | 127 | 17.5 | 245 |
| SPC 710-06 | 6 | 710 | 719.6 | 5 | 5050 | 125 | - | 162 | 656 | 17.5 | 127 | 17.5 | 245 |
| SPC 800-06 | 6 | 800 | 809.6 | 5 | 5050 | 125 | - | 162 | 737 | 17.5 | 127 | 17.5 | 245 |
| SPC 1000-06 | 6 | 1000 | 1009.6 | 5 | 5050 | 125 | - | 162 | 937 | 17.5 | 127 | 17.5 | 245 |
| SPC 1250-06 | 6 | 1250 | 1259.6 | 5 | 5050 | 125 | - | 162 | 1187 | 17.5 | 127 | 17.5 | 245 |

# SPC-08

TYPE 3

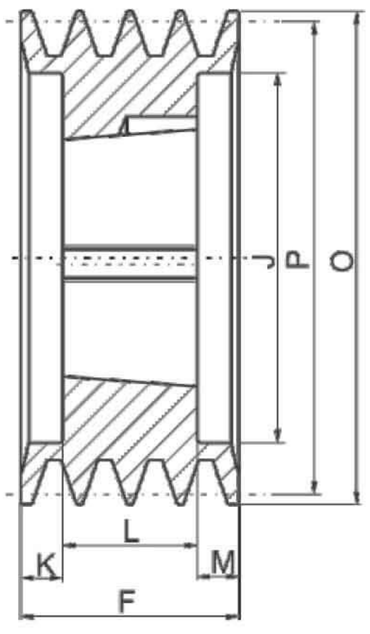


TYPE 4

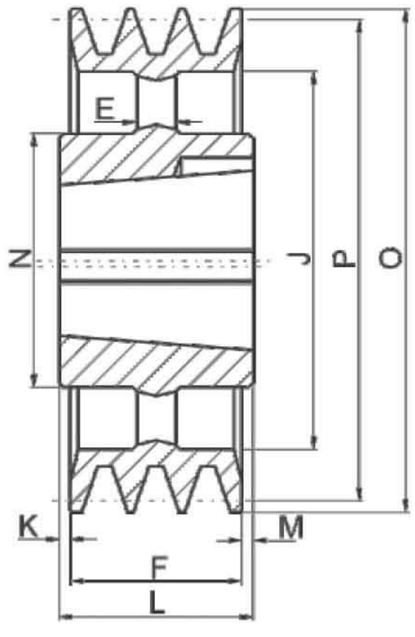


TYPE 5

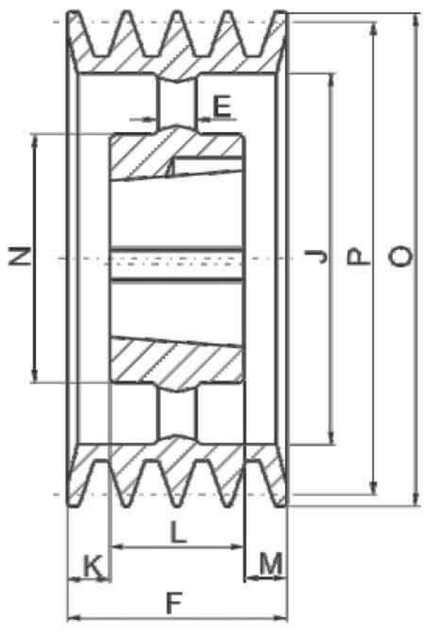


TYPE 6

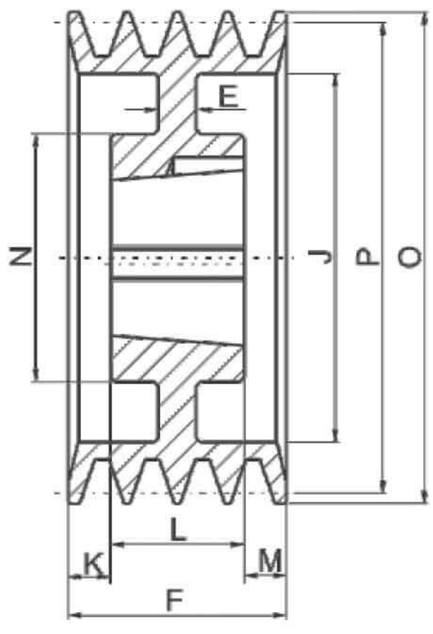


| 型号 | 槽数 | 节圆（P） | 外径（O） | 图例（Type） | 锥套 | 最大孔 | 轮板厚（E） | 轮厚（F） | 止口（J） | K | 孔长（L） | M | 小外圆直径（N） |
|---|---|---|---|---|---|---|---|---|---|---|---|---|---|
| SPC 200-08 | 8 | 200 | 209.6 | 3 | 3535 | 90 | - | 213 | 148 | 62 | 89 | 62 | - |
| SPC 212-08 | 8 | 212 | 221.6 | 3 | 3535 | 90 | - | 213 | 160 | 62 | 89 | 62 | - |
| SPC 224-08 | 8 | 224 | 233.6 | 3 | 3535 | 90 | - | 213 | 170 | 62 | 89 | 62 | - |
| SPC 236-08 | 8 | 236 | 245.6 | 3 | 3535 | 90 | - | 213 | 184 | 62 | 89 | 62 | - |
| SPC 250-08 | 8 | 250 | 259.6 | 3 | 3535 | 90 | - | 213 | 198 | 62 | 89 | 62 | - |
| SPC 265-08 | 8 | 265 | 274.6 | 3 | 3535 | 90 | - | 213 | 213 | 62 | 89 | 62 | - |
| SPC 280-08 | 8 | 280 | 289.6 | 3 | 3535 | 90 | - | 213 | 228 | 62 | 89 | 62 | - |
| SPC 300-08 | 8 | 300 | 309.6 | 3 | 4040 | 100 | - | 213 | 247 | 55.5 | 102 | 55.5 | - |
| SPC 315-08 | 8 | 315 | 324.6 | 3 | 4040 | 100 | - | 213 | 258 | 55.5 | 102 | 55.5 | - |
| SPC 335-08 | 8 | 335 | 344.6 | 6 | 4040 | 100 | - | 213 | 280 | 55.5 | 102 | 55.5 | - |
| SPC 355-08 | 8 | 355 | 364.6 | 6 | 4040 | 100 | - | 213 | 304 | 55.5 | 102 | 55.5 | 200 |
| SPC 375-08 | 8 | 375 | 384.6 | 6 | 4545 | 110 | - | 213 | 324 | 49.5 | 114 | 49.5 | 200 |
| SPC 400-08 | 8 | 400 | 409.6 | 6 | 4545 | 110 | 20 | 213 | 348 | 49.5 | 114 | 49.5 | 220 |
| SPC 425-08 | 8 | 425 | 434.6 | 6 | 5050 | 125 | 30 | 213 | 369 | 43 | 127 | 43 | 245 |
| SPC 450-08 | 8 | 450 | 459.6 | 6 | 5050 | 125 | 30 | 213 | 394 | 43 | 127 | 43 | 245 |
| SPC 475-08 | 8 | 475 | 484.6 | 6 | 5050 | 125 | 30 | 213 | 419 | 43 | 127 | 43 | 245 |
| SPC 500-08 | 8 | 500 | 509.6 | 5 | 5050 | 125 | 30 | 213 | 444 | 43 | 127 | 43 | 245 |
| SPC 530-08 | 8 | 530 | 539.6 | 5 | 5050 | 125 | 30 | 213 | 474 | 43 | 127 | 43 | 245 |
| SPC 560-08 | 8 | 560 | 569.6 | 5 | 5050 | 125 | - | 213 | 504 | 43 | 127 | 43 | 245 |
| SPC 630-08 | 8 | 630 | 639.6 | 5 | 5050 | 125 | - | 213 | 574 | 43 | 127 | 43 | 245 |
| SPC 710-08 | 8 | 710 | 719.6 | 5 | 5050 | 125 | - | 213 | 656 | 43 | 127 | 43 | 245 |
| SPC 800-08 | 8 | 800 | 809.6 | 5 | 5050 | 125 | - | 213 | 737 | 43 | 127 | 43 | 245 |
| SPC 1000-08 | 8 | 1000 | 1009.6 | 5 | 5050 | 125 | - | 213 | 937 | 43 | 127 | 43 | 245 |
| SPC 1250-08 | 8 | 1250 | 1259.6 | 5 | 5050 | 125 | - | 213 | 1187 | 43 | 127 | 43 | 245 |

# 锥套式皮带轮

Cone sleeve type belt pulley

## SPC-10

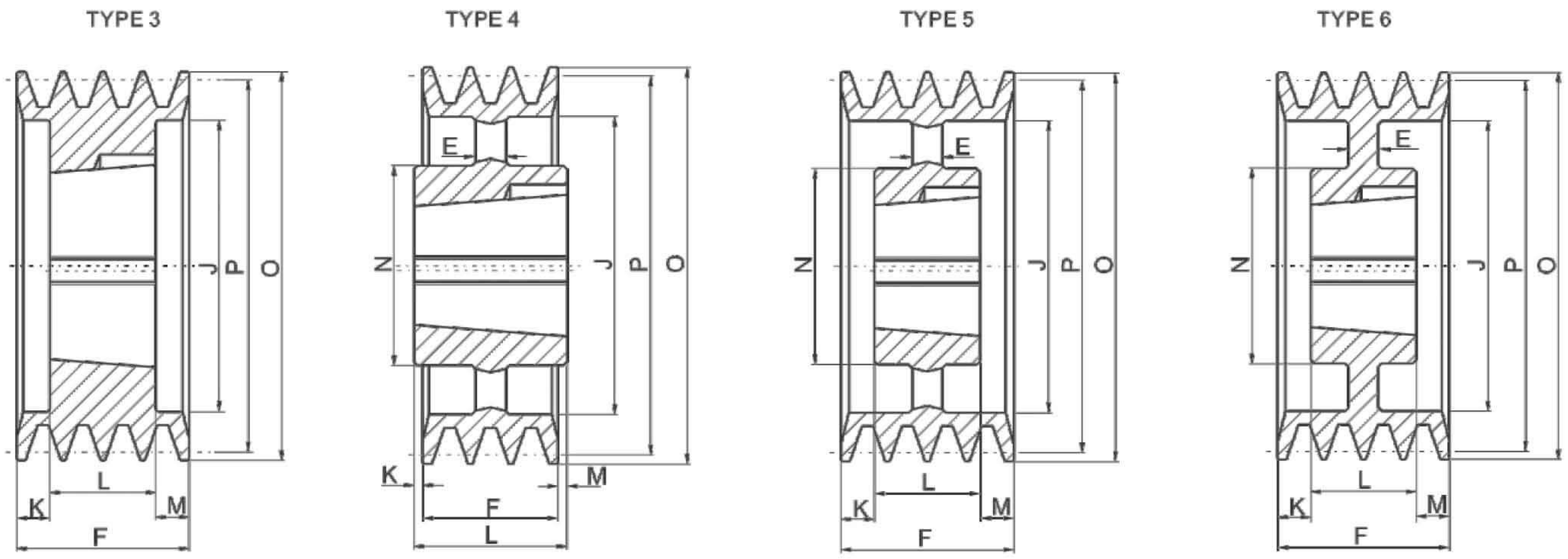


| 型号 | 槽数 | 节圆（P） | 外径（O） | 图例（Type） | 锥套 | 最大孔 | 轮板厚（E） | 轮厚（F） | 止口（J） | K | 孔长（L） | M | 小外圆直径（N） |
|---|---|---|---|---|---|---|---|---|---|---|---|---|---|
| SPC 250-10 | 10 | 250 | 259.6 | 3 | 4040 | 100 | - | 264 | 196 | 81 | 102 | 81 | - |
| SPC 280-10 | 10 | 280 | 289.6 | 3 | 4040 | 100 | - | 264 | 226 | 81 | 102 | 81 | - |
| SPC 300-10 | 10 | 300 | 309.6 | 3 | 4545 | 110 | - | 264 | 245 | 75 | 114 | 75 | - |
| SPC 315-10 | 10 | 315 | 324.6 | 3 | 4545 | 110 | - | 264 | 258 | 75 | 114 | 75 | - |
| SPC 355-10 | 10 | 355 | 364.6 | 3 | 4545 | 110 | - | 264 | 299 | 75 | 114 | 75 | - |
| SPC 400-10 | 10 | 400 | 409.6 | 6 | 5050 | 125 | - | 264 | 342 | 68.5 | 127 | 68.5 | 245 |
| SPC 450-10 | 10 | 450 | 459.6 | 6 | 5050 | 125 | 40 | 264 | 394 | 68.5 | 127 | 68.5 | 245 |
| SPC 500-10 | 10 | 500 | 509.6 | 6 | 5050 | 125 | 40 | 264 | 444 | 68.5 | 127 | 68.5 | 245 |
| SPC 560-10 | 10 | 560 | 569.6 | 5 | 5050 | 125 | - | 264 | 504 | 68.5 | 127 | 68.5 | 245 |
| SPC 630-10 | 10 | 630 | 639.6 | 5 | 5050 | 125 | - | 264 | 574 | 68.5 | 127 | 68.5 | 245 |
| SPC 710-10 | 10 | 710 | 719.6 | 5 | 5050 | 125 | - | 264 | 656 | 68.5 | 127 | 68.5 | 245 |
| SPC 800-10 | 10 | 800 | 809.6 | 5 | 5050 | 125 | - | 264 | 737 | 68.5 | 127 | 68.5 | 245 |
| SPC 1000-10 | 10 | 1000 | 1009.6 | 5 | 5050 | 125 | - | 264 | 937 | 68.5 | 127 | 68.5 | 245 |
| SPC 1250-10 | 10 | 1250 | 1259.6 | 5 | 5050 | 125 | - | 264 | 1187 | 68.5 | 127 | 68.5 | 245 |

# Bolt-on Hubs

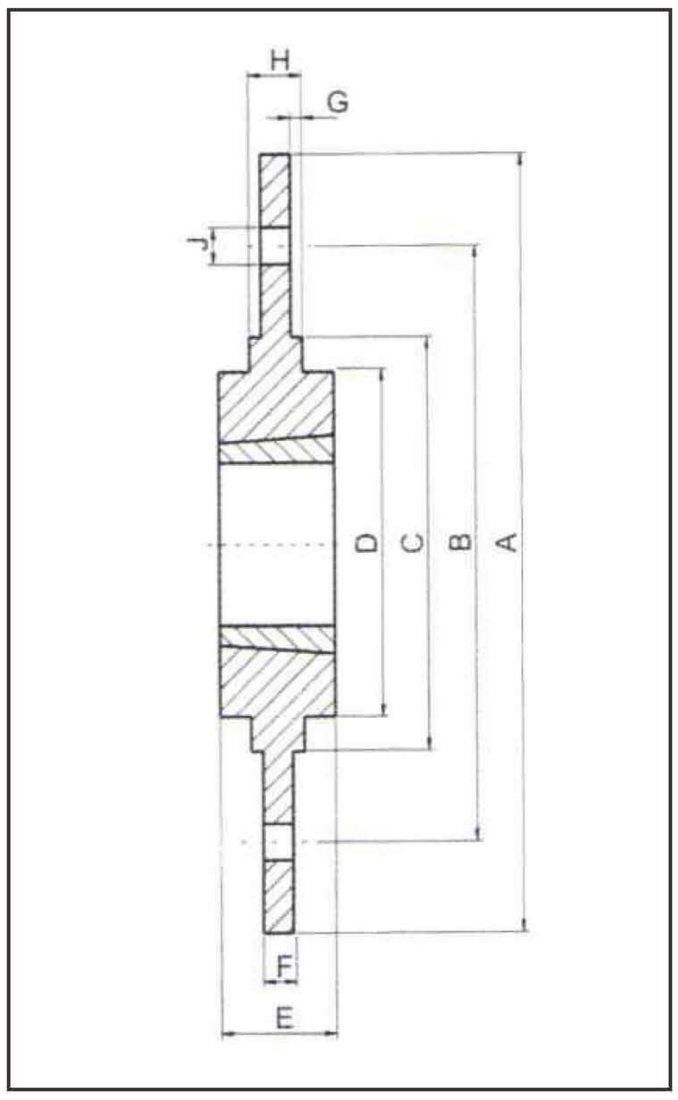





ALL series of specifications can be sold off-the shelf,immedate delivery.
Fast and convenient.
Flease contact us directly.

| 产品型号 | 锥套型号 | 主要尺寸 | | | | | | | | SCREWHOLE NXJ |
|---|---|---|---|---|---|---|---|---|---|---|
| | | A | B | CH9 | D | E | F | G | H | |
| SM1200 | 1210 | 180 | 135 | 90 | 75 | 25 | 6.5 | 2.5 | 11.5 | 6xΦ7.5 |
| SM1600 | 1615 | 200 | 150 | 110 | 85 | 38 | 7.5 | 2.5 | 12.5 | 6xΦ7.5 |
| SM2000 | 2012 | 270 | 190 | 140 | 110 | 32 | 8.5 | 2.5 | 13.5 | 6xΦ9.5 |
| SM2500 | 2517 | 340 | 240 | 170 | 125 | 45 | 9.5 | 2.5 | 14.5 | 6xΦ11.5 |
| SM30-1 | 3020 | 430 | 300 | 220 | 160 | 51 | 13.5 | 2.5 | 18.5 | 6xΦ13.5 |
| SM30-2 | 3020 | 485 | 340 | 250 | 160 | 51 | 13.5 | 2.5 | 18.5 | 6xΦ13.5 |
| | | | | | | | | | | |
| SM1210 | 1210 | 120 | 100 | 80 | 75 | 25 | 6.5 | 2.5 | 11.5 | 6xΦ7.5 |
| SM1610 | 1610 | 130 | 110 | 90 | 85 | 25 | 7.5 | 2.5 | 12.5 | 6xΦ7.5 |
| SM2012* | 2012 | 145 | 125 | 115 | 110 | 32 | 8.5 | 2.5 | 13.5 | 6xΦ7.5 |
| SM2517 | 2517 | 185 | 155 | 130 | 125 | 45 | 9.5 | 2.5 | 14.5 | 6xΦ11.5 |
| SM3020 | 3020 | 220 | 190 | 160 | 160 | 51 | 13.5 | 2.5 | 18.5 | 6xΦ13.5 |

# HRC梅花联轴器

HRC Couplings

## HRC COUPLINGS

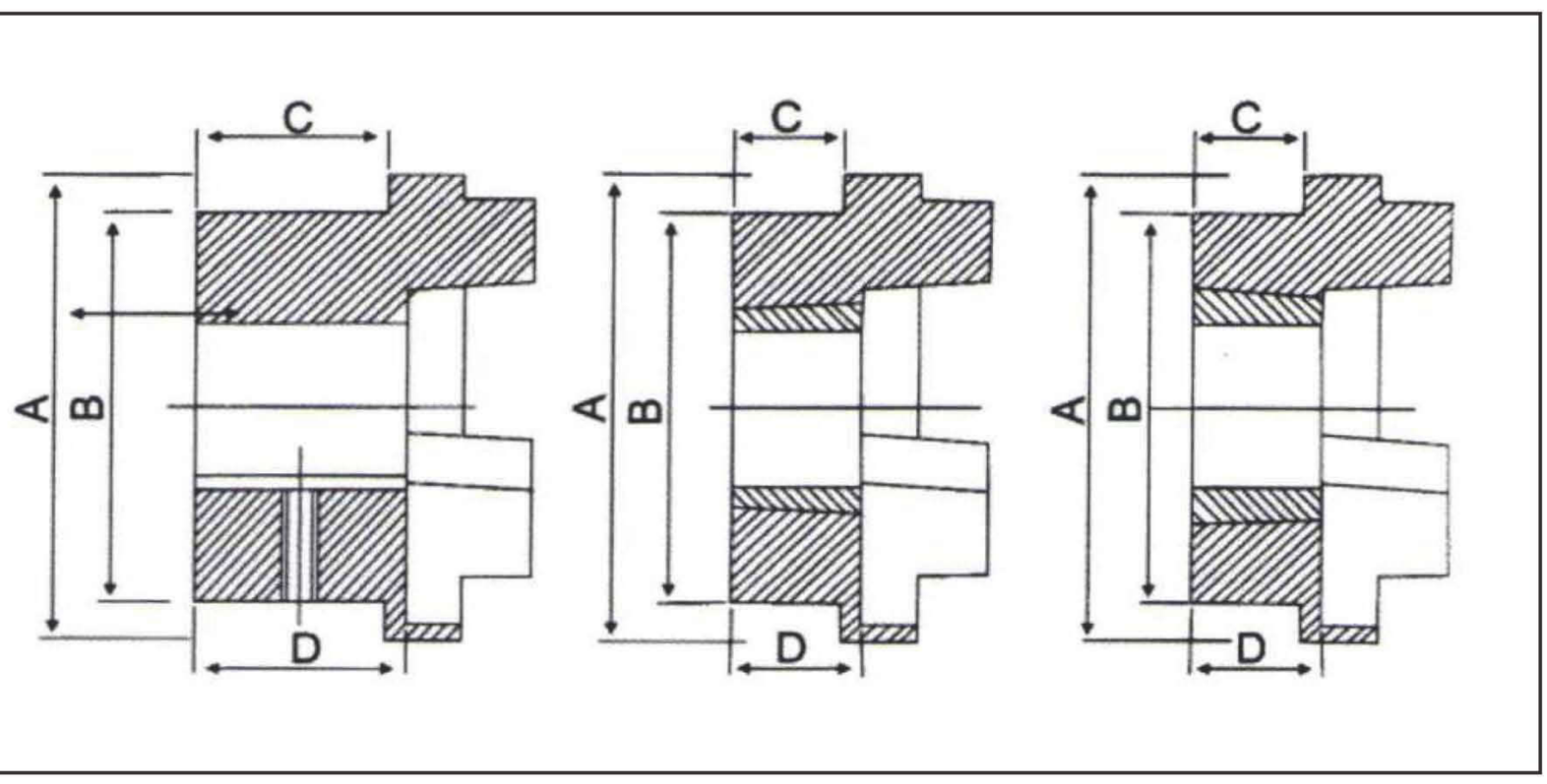





| 锥孔 | | | | | | 定规格孔径 | | | | A | B | E | F | G | L 1 | L 2 | L 3 |
|---|---|---|---|---|---|---|---|---|---|---|---|---|---|---|---|---|---|
| 规格 | 锥套 | 孔径 | | C | D | 孔径 | | C | D | | | | | | | | |
| | | 最大 | 最小 | | | 最大 | 最小 | | | | | | | | | | |
| 70 | 1008 | 25 | 9 | 20 | 23.5 | 32 | 10 | 20 | 23.5 | 69 | 60 | 31 | 25 | 18 | 65 | 66.5 | 68 |
| 90 | 1108 | 28 | 9 | 19.5 | 23.5 | 42 | 10 | 26/19.5 | 30.5 | 85 | 65 | 32 | 30.5 | 22.5 | 69.5 | 76 | 82.5 |
| 110 | 1610 | 42 | 14 | 18.5 | 26.5 | 55 | 10 | 37/18.5 | 45.5 | 112 | 100 | 45 | 45 | 29 | 82 | 101 | 119 |
| 130 | 1610 | 42 | 14 | 18 | 26.5 | 60 | 20 | 47/18 | 47.5 | 130 | 105 | 50 | 53 | 36 | 89 | 118 | 146 |
| 150 | 2012 | 50 | 14 | 23.5 | 33.5 | 65 | 28 | 50/23.5 | 56 | 150 | 115 | 62 | 60 | 40 | 107 | 134 | 160 |
| 180 | 2517 | 60 | 16 | 34.5 | 46.5 | 80 | 28 | 58/34.5 | 70 | 180 | 125 | 77 | 73 | 49 | 142 | 166 | 189 |
| 230 | 3020 | 75 | 25 | 39.5 | 52.5 | 100 | 48 | 77.5/39.5 | 90 | 225 | 155 | 99 | 85.5 | 59.5 | 165 | 202 | 240 |
| 280 | 3525 | 100 | 35 | 51 | 66.5 | 115 | 60 | 90/51 | 105.5 | 275 | 206 | 119 | 105.5 | 74.5 | 208 | 247 | 286 |

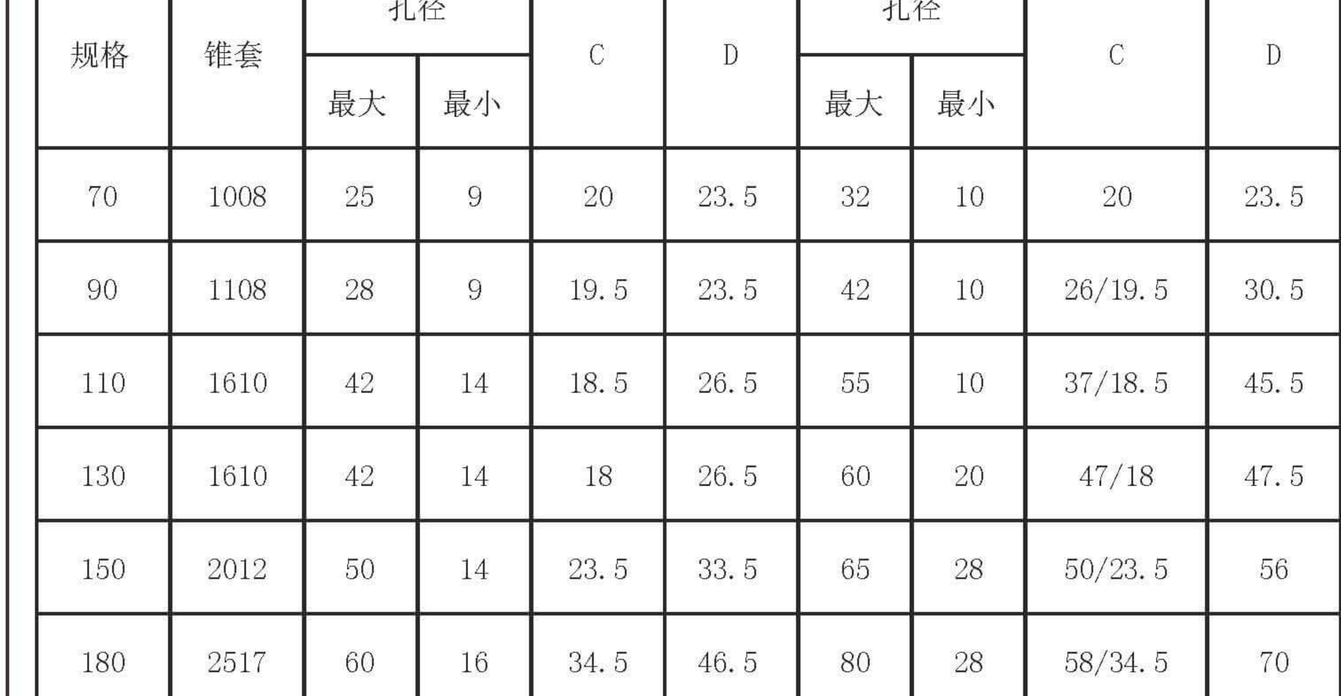


L1是机组装配长度F. F-H. H-F. H
L2是机组装配长度F. B-H. B
L3是机组装配长度B. B

J*是松紧走上锥套所需的帮手空间。
采用缩短的扳手，可减少此尺寸。

# 锥套式皮带轮
Cone sleeve type belt pulley

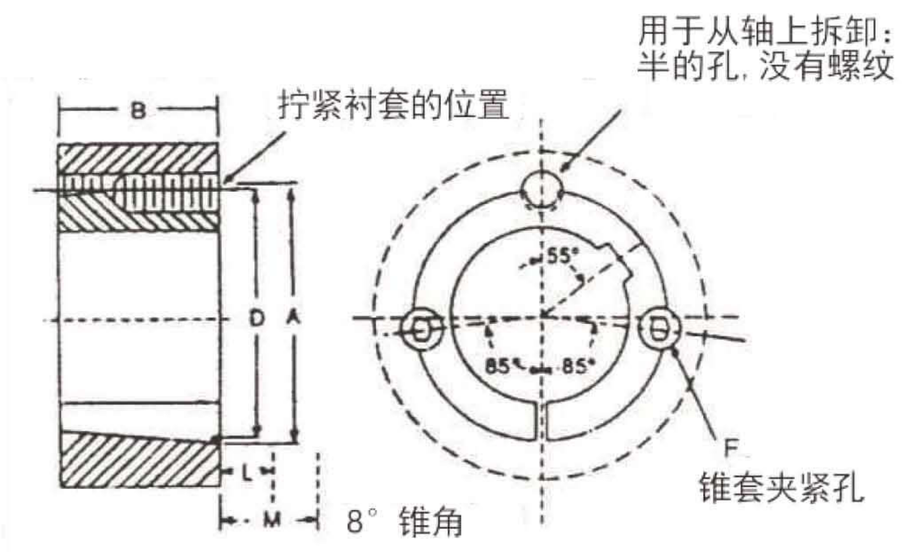






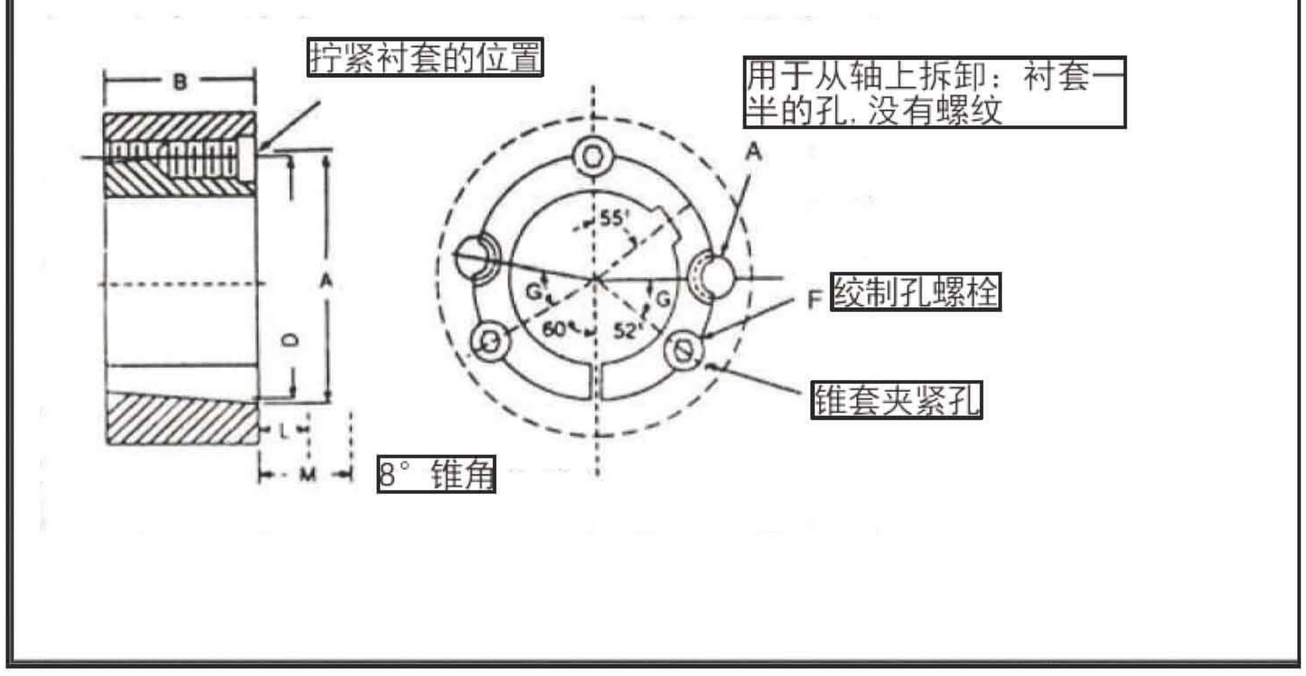


## 1008至3030的锥套尺寸
Dimensions for 1008 thru 3030 TAPER Bushings

| 锥套型号 | A | B | D | 螺丝 |
|---|---|---|---|---|
| 1008 | 1 3/8 | 7/8 | 1 21/64 | 1/4x1/2 |
| 1108 | 1 1/2 | 7/8 | 1 29/64 | 1/4x1/2 |
| 1210 | 1 7/8 | 1 | 1 3/4 | 3/8x5/8 |
| 1215 | 1 7/8 | 1 1/2 | 1 3/4 | 3/8x5/8 |
| 1310 | 2 | 1 | 1 7/8 | 3/8x5/8 |
| 1610 | 2 1/4 | 1 | 2 1/8 | 3/8x5/8 |
| 1615 | 2 1/4 | 1 1/2 | 2 1/8 | 3/8x5/8 |
| 2012 | 2 3/4 | 1 1/4 | 2 5/8 | 7/16x7/8 |
| 2017 | 2 3/4 | 1 3/4 | 2 5/8 | 7/16x7/8 |
| 2517 | 3 3/4 | 1 3/4 | 3 1/4 | 1/2x1 |
| 2525 | 3 3/4 | 2 1/2 | 3 1/4 | 1/2x1 |
| 3020 | 4 1/4 | 2 | 4 | 5/8x1 1/4 |
| 3030 | 4 1/4 | 3 | 4 | 5/8x1 1/4 |

锥套材质可选用铸铁或不锈钢

## 3535至5050的锥套尺寸
Dimensions for 3535 thru 5050 TAPER Bushings

| 锥套型号 | A | B | D | 绞制孔螺丝 | G |
|---|---|---|---|---|---|
| 3535 | 5 | 3 1/2 | 4.83 | 1/2x1 1/2 | 40 |
| 4040 | 5 3/4 | 4 | 5.54 | 5/8x1 3/4 | 40 |
| 4545 | 6 3/8 | 4 1/2 | 6.13 | 3/4x2 | 40 |
| 5050 | 7 | 5 | 6.72 | 7/8x2 1/4 | 37 |

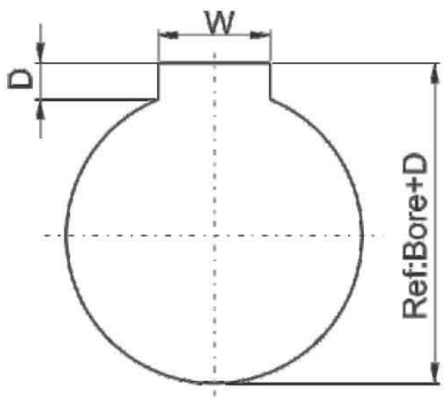

# 锥套式皮带轮

Cone sleeve type belt pulley

## 锥套

| 锥套型号 | 孔径 | 键槽尺寸 |
|---|---|---|
| 1008 | 10 | 3x1.40 |
| | 11 | 4x1.80 |
| | 12 | |
| | 14 | 5x2.30 |
| | 16 | |
| | 18 | 6x2.80 |
| | 19 | |
| | 20 | |
| | 22 | |
| | 24 | 8x2.00 |
| | 25 | 8x1.30 |

| 锥套型号 | 孔径 | 键槽尺寸 |
|---|---|---|
| 1108 | 10 | 3x1.40 |
| | 11 | 4x1.80 |
| | 12 | |
| | 14 | 5x2.30 |
| | 16 | |
| | 18 | 6x2.80 |
| | 19 | |
| | 20 | |
| | 22 | |
| | 24 | 8x3.30 |
| | 25 | |
| | 28 | 8x2.00 |

| 锥套型号 | 孔径 | 键槽尺寸 |
|---|---|---|
| 1210 | 11 | 4x1.80 |
| | 12 | |
| | 14 | 5x2.30 |
| | 16 | |
| | 18 | 6x2.80 |
| | 19 | |
| | 20 | |
| | 22 | |
| | 24 | 8x3.30 |
| | 25 | |
| | 28 | |
| | 30 | |
| | 32 | 10x3.30 |

| 锥套型号 | 孔径 | 键槽尺寸 |
|---|---|---|
| 1215 | 11 | 4x1.80 |
| | 12 | |
| | 14 | 5x2.30 |
| | 16 | |
| | 18 | 6x2.80 |
| | 19 | |
| | 20 | |
| | 22 | |
| | 24 | 8x3.30 |
| | 25 | |
| | 28 | |
| | 30 | |
| | 32 | 10x3.30 |

| 锥套型号 | 孔径 | 键槽尺寸 |
|---|---|---|
| 1310 | 14 | 5x2.30 |
| | 16 | |
| | 18 | 6x2.80 |
| | 19 | |
| | 20 | |
| | 22 | |
| | 24 | 8x3.30 |
| | 25 | |
| | 28 | |
| | 30 | |
| | 32 | 10x3.30 |
| | 35 | |

| 锥套型号 | 孔径 | 键槽尺寸 |
|---|---|---|
| 1610 | 14 | 5x2.30 |
| | 16 | |
| | 18 | 6x2.80 |
| | 19 | |
| | 20 | |
| | 22 | |
| | 24 | 8x3.30 |
| | 25 | |
| | 28 | |
| | 30 | |
| | 32 | 10x3.30 |
| | 35 | |
| | 38 | |
| | 40 | 12x3.30 |
| | 42 | 12x2.20 |

| 锥套型号 | 孔径 | 键槽尺寸 |
|---|---|---|
| 1615 | 14 | 5x2.30 |
| | 16 | |
| | 18 | 6x2.80 |
| | 19 | |
| | 20 | |
| | 22 | |
| | 24 | 8x3.30 |
| | 25 | |
| | 28 | |
| | 30 | |
| | 32 | 10x3.30 |
| | 35 | |
| | 38 | |
| | 40 | 12x3.30 |
| | 42 | 12x2.20 |

| 锥套型号 | 孔径 | 键槽尺寸 |
|---|---|---|
| 2012 | 18 | 6x2.80 |
| | 19 | |
| | 20 | |
| | 22 | |
| | 24 | 8x3.30 |
| | 25 | |
| | 28 | |
| | 30 | |
| | 32 | 10x3.30 |
| | 35 | |
| | 38 | |
| | 40 | 12x3.30 |
| | 42 | |
| | 45 | 14x3.80 |
| | 48 | |
| | 50 | |

| 锥套型号 | 孔径 | 键槽尺寸 |
|---|---|---|
| 2517 | 20 | 6x2.80 |
| | 22 | |
| | 24 | 8x3.30 |
| | 25 | |
| | 28 | |
| | 30 | |
| | 32 | 10x3.30 |
| | 35 | |
| | 38 | |
| | 40 | 12x3.30 |
| | 42 | |
| | 45 | 14x3.80 |
| | 48 | |
| | 50 | |
| | 55 | 16x4.30 |
| | 60 | 18x4.40 |

| 锥套型号 | 孔径 | 键槽尺寸 |
|---|---|---|
| 2525 | 20 | 6x2.80 |
| | 22 | |
| | 24 | 8x3.30 |
| | 25 | |
| | 28 | |
| | 30 | |
| | 32 | 10x3.30 |
| | 35 | |
| | 38 | |
| | 40 | 12x3.30 |
| | 42 | |
| | 45 | 14x3.80 |
| | 48 | |
| | 50 | |
| | 55 | 16x4.30 |
| | 60 | 16x4.40 |

| 锥套型号 | 孔径 | 键槽尺寸 |
|---|---|---|
| 3020 | 25 | 8x3.30 |
| | 28 | |
| | 30 | |
| | 32 | 10x3.30 |
| | 35 | |
| | 38 | |
| | 40 | 12x3.30 |
| | 42 | |
| | 45 | 14x3.80 |
| | 48 | |
| | 50 | |
| | 55 | 16x4.30 |
| | 60 | 18x4.40 |
| | 65 | |
| | 70 | 20x4.90 |
| | 75 | |

| 锥套型号 | 孔径 | 键槽尺寸 |
|---|---|---|
| 3030 | 25 | 8x3.30 |
| | 28 | |
| | 30 | |
| | 32 | 10x3.30 |
| | 35 | |
| | 38 | |
| | 40 | 12x3.30 |
| | 42 | |
| | 45 | 14x3.30 |
| | 48 | |
| | 50 | |
| | 55 | 16x4.30 |
| | 60 | 18x4.40 |
| | 65 | |
| | 70 | 20x4.90 |
| | 75 | |

| 锥套型号 | 孔径 | 键槽尺寸 |
|---|---|---|
| 3535 | 35 | 10x3.30 |
| | 38 | |
| | 40 | 12x3.30 |
| | 42 | |
| | 45 | 14x3.80 |
| | 48 | |
| | 50 | |
| | 55 | 16x4.30 |
| | 60 | 18x4.40 |
| | 65 | |
| | 70 | 20x4.90 |
| | 75 | |
| | 80 | 22x5.40 |
| | 85 | |
| | 90 | 25x5.40 |

| 锥套型号 | 孔径 | 键槽尺寸 |
|---|---|---|
| 4040 | 40 | 12x3.30 |
| | 42 | |
| | 45 | 14x3.80 |
| | 48 | |
| | 50 | |
| | 55 | 16x4.30 |
| | 60 | 18x4.40 |
| | 65 | |
| | 70 | 20x4.90 |
| | 75 | |
| | 80 | 22x5.40 |
| | 85 | |
| | 90 | 25x5.40 |
| | 95 | |
| | 100 | 28x6.40 |

| 锥套型号 | 孔径 | 键槽尺寸 |
|---|---|---|
| 4545 | 55 | 16x4.30 |
| | 60 | 18x4.40 |
| | 65 | |
| | 70 | 20x4.90 |
| | 75 | |
| | 80 | 22x5.40 |
| | 85 | |
| | 90 | 25x5.40 |
| | 95 | |
| | 100 | 28x6.40 |
| | 105 | |
| | 110 | |

| 锥套型号 | 孔径 | 键槽尺寸 |
|---|---|---|
| 5050 | 60 | 18x4.40 |
| | 65 | |
| | 70 | 20x4.90 |
| | 75 | |
| | 80 | 22x5.40 |
| | 85 | |
| | 90 | 25x5.40 |
| | 95 | |
| | 100 | 28x6.40 |
| | 105 | |
| | 110 | |
| | 115 | 32x7.40 |
| | 120 | |
| | 125 | |

# 锥套 美标孔径

| 锥套型号 | 孔径 | 键槽尺寸 |
|---|---|---|
| 1008 | 1/2 | 1/8x1/16 |
| | 9/16 | |
| | 5/8 | 3/16x3/32 |
| | 11/16 | |
| | 3/4 | |
| | 13/16 | |
| | 7/8 | |
| | 15/16 | 1/4x1/16 |
| | 1 | |
| 1108 | 1/2 | 1/8x1/16 |
| | 9/16 | |
| | 5/8 | 3/16x3/32 |
| | 11/16 | |
| | 3/4 | |
| | 13/16 | 1/4x1/8 |
| | 7/8 | |
| | 15/16 | |
| | 1 | |
| | 1 1/16 | 1/4x1/16 |
| | 1 1/8 | |
| 1210 | 1/2 | 1/8x1/16 |
| | 9/16 | |
| | 5/8 | 3/16x3/32 |
| | 11/16 | |
| | 3/4 | |
| | 13/16 | |
| | 7/8 | 1/4x1/8 |
| | 15/16 | |
| | 1 | |
| | 1 1/16 | |
| | 1 1/8 | |
| | 1 3/16 | |
| | 1 1/4 | |
| 1215 | 1/2 | 1/8x1/16 |
| | 9/16 | |
| | 5/8 | 3/16x3/32 |
| | 11/16 | |
| | 3/4 | |
| | 13/16 | |
| | 7/8 | |
| | 15/16 | 1/4x1/8 |
| | 1 | |
| | 1 1/16 | |
| | 1 1/8 | |
| | 1 3/16 | |
| | 1 1/4 | |
| 1310 | 1/2 | 1/8x1/16 |
| | 9/16 | |
| | 5/8 | 3/16x3/32 |
| | 11/16 | |
| | 3/4 | |
| | 13/16 | |
| | 7/8 | |
| | 15/16 | 1/4x1/8 |
| | 1 | |
| | 1 1/16 | |
| | 1 1/8 | |
| | 1 3/16 | |
| | 1 1/4 | |

| 锥套型号 | 孔径 | 键槽尺寸 |
|---|---|---|
| 1610 | 1/2 | 1/8x1/16 |
| | 9/16 | |
| | 5/8 | 3/16x3/32 |
| | 11/16 | |
| | 3/4 | |
| | 13/16 | |
| | 7/8 | |
| | 15/16 | 1/4x1/8 |
| | 1 | |
| | 1 1/16 | |
| | 1 1/8 | |
| | 1 3/16 | |
| | 1 1/4 | |
| | 1 5/16 | 5/16x5/32 |
| | 1 3/8 | |
| | 1 7/16 | 3/8x3/16 |
| | 1 1/2 | |
| | 1 9/16 | 3/8x1/8 |
| | 1 5/8 | |
| 1615 | 1/2 | 1/8x1/16 |
| | 9/16 | |
| | 5/8 | 3/16x3/32 |
| | 11/16 | |
| | 3/4 | |
| | 13/16 | |
| | 7/8 | |
| | 15/16 | 1/4x1/8 |
| | 1 | |
| | 1 1/16 | |
| | 1 1/8 | |
| | 1 3/16 | |
| | 1 1/4 | |
| | 1 5/16 | 5/16x5/32 |
| | 1 3/8 | |
| | 1 7/16 | 3/8x3/16 |
| | 1 1/2 | |
| | 1 9/16 | 3/8x1/8 |
| | 1 5/8 | |
| 2012 | 1/2 | 1/8x1/16 |
| | 9/16 | |
| | 5/8 | 3/16x3/32 |
| | 11/16 | |
| | 3/4 | |
| | 13/16 | |
| | 7/8 | |
| | 15/16 | 1/4x1/8 |
| | 1 | |
| | 1 1/16 | |
| | 1 1/8 | |
| | 1 3/16 | |
| | 1 1/4 | |
| | 1 5/16 | 5/16x5/32 |
| | 1 3/8 | |
| | 1 7/16 | 3/8x3/16 |
| | 1 1/2 | |
| | 1 9/16 | 3/8x1/8 |
| | 1 5/8 | |

| 锥套型号 | 孔径 | 键槽尺寸 |
|---|---|---|
| 2517 | 1/2 | 1/8x1/16 |
| | 5/8 | 3/16x3/32 |
| | 11/16 | |
| | 3/4 | |
| | 13/16 | |
| | 7/8 | |
| | 15/16 | 1/4x1/8 |
| | 1 | |
| | 1 1/16 | |
| | 1 1/8 | |
| | 1 3/16 | |
| | 1 1/4 | |
| | 1 5/16 | 5/16x5/32 |
| | 1 3/8 | |
| | 1 7/16 | 3/8x3/16 |
| | 1 1/2 | |
| | 1 9/16 | |
| | 1 5/8 | |
| | 1 11/16 | |
| | 1 3/4 | |
| | 1 13/16 | 1/2x1/4 |
| | 1 7/8 | |
| | 1 15/16 | |
| | 2 | |
| | 2 1/16 | |
| | 2 1/8 | |
| | 2 3/16 | |
| | 2 1/4 | |
| | 2 5/16 | 5/8x3/16 |
| | 2 3/8 | |
| | 2 7/16 | |
| | 2 1/2 | |
| 2525 | 3/4 | 3/16x3/32 |
| | 7/8 | |
| | 1 | 1/4x1/8 |
| | 1 1/8 | |
| | 1 3/16 | |
| | 1 1/4 | |
| | 1 3/8 | 5/16x5/32 |
| | 1 7/16 | |
| | 1 1/2 | 3/8x3/16 |
| | 1 5/8 | |
| | 1 11/16 | |
| | 1 3/4 | |
| | 1 13/16 | 1/2x1/4 |
| | 1 7/8 | |
| | 1 15/16 | |
| | 2 | |
| | 2 1/8 | |
| | 2 3/16 | |
| | 2 1/4 | |
| | 2 5/16 | 5/8x3/16 |
| | 2 3/8 | |
| | 2 7/16 | |
| | 2 1/2 | |

| 锥套型号 | 孔径 | 键槽尺寸 |
|---|---|---|
| 3020 | 7/8 | 3/16x3/32 |
| | 15/16 | 1/4x1/8 |
| | 1 | |
| | 1 1/8 | |
| | 1 3/16 | |
| | 1 1/4 | |
| | 1 5/16 | 5/16x5/32 |
| | 1 3/8 | |
| | 1 7/16 | 3/8x3/16 |
| | 1 1/2 | |
| | 1 9/16 | |
| | 1 5/8 | |
| | 1 11/16 | |
| | 1 3/4 | |
| | 1 13/16 | 1/2x1/4 |
| | 1 7/8 | |
| | 1 15/16 | |
| | 2 | |
| | 2 1/16 | |
| | 2 1/8 | |
| | 2 3/16 | |
| | 2 1/4 | |
| | 2 5/16 | 5/8x5/16 |
| | 2 3/8 | |
| | 2 7/16 | |
| | 2 1/2 | |
| | 2 5/8 | |
| | 2 11/16 | |
| | 2 3/4 | |
| | 2 13/16 | 3/4x1/4 |
| | 2 7/8 | |
| | 2 15/16 | |
| | 3 | |
| 3020 | 15/16 | 1/4x1/8 |
| | 1 | |
| | 1 1/8 | |
| | 1 3/16 | |
| | 1 1/4 | |
| | 1 5/16 | 5/16x5/32 |
| | 1 3/8 | |
| | 1 7/16 | 3/8x3/16 |
| | 1 1/2 | |
| | 1 9/16 | |
| | 1 5/8 | |
| | 1 11/16 | |
| | 1 3/4 | |
| | 1 13/16 | 1/2x1/4 |
| | 1 7/8 | |
| | 1 15/16 | |
| | 2 | |
| | 2 1/16 | |
| | 2 1/8 | |
| | 2 3/16 | |
| | 2 1/4 | |
| | 2 5/16 | 5/8x5/16 |
| | 2 3/8 | |
| | 2 7/16 | |
| | 2 1/2 | |
| | 2 5/8 | |
| | 2 11/16 | |
| | 2 3/4 | |
| | 2 13/16 | 3/4x1/4 |
| | 2 7/8 | |
| | 2 15/16 | |
| | 3 | |

| 锥套型号 | 孔径 | 键槽尺寸 |
|---|---|---|
| 3535 | 1 3/16 | 1/4x1/8 |
| | 1 1/4 | |
| | 1 3/8 | 5/16x5/32 |
| | 1 7/16 | 3/8x3/16 |
| | 1 1/2 | |
| | 1 5/8 | |
| | 1 11/16 | |
| | 1 3/4 | |
| | 1 7/8 | |
| | 1 15/16 | 1/2x1/4 |
| | 2 | |
| | 2 1/8 | |
| | 2 3/16 | |
| | 2 1/4 | |
| | 2 5/16 | 5/8x5/16 |
| | 2 3/8 | |
| | 2 7/16 | |
| | 1 1/2 | |
| | 2 5/8 | |
| | 2 3/4 | |
| | 2 7/8 | 3/4x3/8 |
| | 2 15/16 | |
| | 3 | |
| | 3 1/8 | |
| | 3 3/16 | |
| | 3 1/4 | 7/8x1/4 |
| | 3 5/16 | |
| | 3 3/8 | |
| | 3 7/16 | |
| | 3 1/2 | |
| 4040 | 1 7/16 | 3/8x3/16 |
| | 1 1/2 | |
| | 1 5/8 | |
| | 1 11/16 | |
| | 1 3/4 | |
| | 1 7/8 | 1/2x1/4 |
| | 1 15/16 | |
| | 2 | |
| | 2 1/8 | |
| | 2 3/16 | |
| | 2 1/4 | |
| | 2 3/8 | 5/8x5/16 |
| | 2 7/16 | |
| | 2 1/2 | |
| | 2 5/8 | |
| | 2 11/16 | |
| | 2 3/4 | |
| | 2 7/8 | 3/4x3/8 |
| | 2 15/16 | |
| | 3 | |
| | 3 1/8 | |
| | 3 3/16 | |
| | 3 1/4 | 7/8x7/16 |
| | 3 3/8 | |
| | 3 7/16 | |
| | 3 1/2 | |
| | 3 5/8 | |
| | 3 11/16 | |
| | 3 3/4 | |
| | 3 7/8 | 1x1/4 |
| | 3 15/16 | |
| | 4 | |

| 锥套型号 | 孔径 | 键槽尺寸 |
|---|---|---|
| 4545 | 1 3/16 | 1/4x1/8 |
| | 1 1/4 | |
| | 1 3/8 | 5/16x5/32 |
| | 1 7/16 | 3/8x3/16 |
| | 1 1/2 | |
| | 1 5/8 | |
| | 1 11/16 | |
| | 1 3/4 | |
| | 1 7/8 | |
| | 1 15/16 | 1/2x1/4 |
| | 2 | |
| | 2 1/8 | |
| | 2 3/16 | |
| | 2 1/4 | |
| | 2 5/16 | 5/8x5/16 |
| | 2 3/8 | |
| | 2 7/16 | |
| | 1 1/2 | |
| | 2 5/8 | |
| | 2 3/4 | |
| | 2 7/8 | 3/4x3/8 |
| | 2 15/16 | |
| | 3 | |
| | 3 1/8 | |
| | 3 3/16 | |
| | 3 1/4 | 7/8x1/4 |
| | 3 5/16 | |
| | 3 3/8 | |
| | 3 7/16 | |
| | 3 1/2 | |
| 5050 | 1 7/16 | 3/8x3/16 |
| | 1 1/2 | |
| | 1 5/8 | |
| | 1 11/16 | |
| | 1 3/4 | |
| | 1 7/8 | 1/2x1/4 |
| | 1 15/16 | |
| | 2 | |
| | 2 1/8 | |
| | 2 3/16 | |
| | 2 1/4 | |
| | 2 3/8 | 5/8x5/16 |
| | 2 7/16 | |
| | 2 1/2 | |
| | 2 5/8 | |
| | 2 11/16 | |
| | 2 3/4 | |
| | 2 7/8 | 3/4x3/8 |
| | 2 15/16 | |
| | 3 | |
| | 3 1/8 | |
| | 3 3/16 | |
| | 3 1/4 | 7/8x7/16 |
| | 3 3/8 | |
| | 3 7/16 | |
| | 3 1/2 | |
| | 3 5/8 | |
| | 3 11/16 | |
| | 3 3/4 | |
| | 3 7/8 | 1x1/4 |
| | 3 15/16 | |
| | 4 | |

| 锥套型号 | 孔径 | 键槽尺寸 |
|---|---|---|
| | 1 15/16 | 1/2x1/4 |
| | 2 | |
| | 2 3/16 | 5/8x5/16 |
| | 2 3/8 | |
| | 2 7/16 | |
| | 2 5/8 | |
| | 2 11/16 | |
| | 2 3/4 | |
| | 2 7/8 | 3/4x3/8 |
| | 2 15/16 | |
| | 3 | |
| | 3 3/8 | |
| | 3 7/16 | 7/8x7/16 |
| | 3 5/8 | |
| | 3 7/8 | |
| | 3 15/16 | |
| | 4 | 1x1/2 |
| | 4 1/4 | |
| | 4 3/8 | |
| | 4 7/16 | |
| | 4 1/2 | |
| | 4 7/8 | 1 1/4x7/16 |
| | 4 15/16 | |
| | 5 | |

# 锥套式皮带轮

Cone sleeve type belt pulley

## 表1:锥套拧紧力矩

| 锥套规格 | | 1008 | 1108 | 1210 | 1610 | 1615 | 2012 | 2517 | 3020 | 3030 | 3525 | 3535 | 4030 | 4040 | 4535 | 4545 | 5040 | 5050 |
|---|---|---|---|---|---|---|---|---|---|---|---|---|---|---|---|---|---|---|
| 螺栓拧紧扭矩（Nm） | | 5.6 | 5.6 | 20 | 20 | 20 | 30 | 50 | 90 | 90 | 115 | 115 | 170 | 170 | 190 | 190 | 270 | 270 |
| 螺栓详情 | 数量 | 2 | 2 | 2 | 2 | 2 | 2 | 2 | 2 | 2 | 3 | 3 | 3 | 3 | 3 | 3 | 3 | 3 |
| | 规格（BSW） | 1/4″ | 1/4″ | 3/8″ | 3/8″ | 3/8″ | 7/16″ | 1/2″ | 5/8″ | 5/8″ | 1/2″ | 1/2″ | 5/8″ | 5/8″ | 3/4″ | 3/4″ | 7/8″ | 7/8″ |
| | 六角凹头规格（mm） | 3 | 3 | 5 | 5 | 5 | 6 | 6 | 8 | 8 | 10 | 10 | 12 | 12 | 14 | 14 | 14 | 14 |
| 大端直径（mm） | | 35.0 | 38.0 | 47.5 | 57.0 | 57.0 | 70.0 | 85.5 | 108.0 | 108.0 | 127.0 | 127.0 | 146.0 | 146.0 | 162.0 | 162.0 | 177.5 | 177.5 |
| 近似重量（Kg） | | 0.1 | 0.1 | 0.2 | 0.3 | 0.3 | 0.7 | 1.5 | 2.7 | 3.6 | 3.8 | 5.0 | 5.6 | 7.7 | 7.5 | 10.0 | 11.1 | 14.0 |

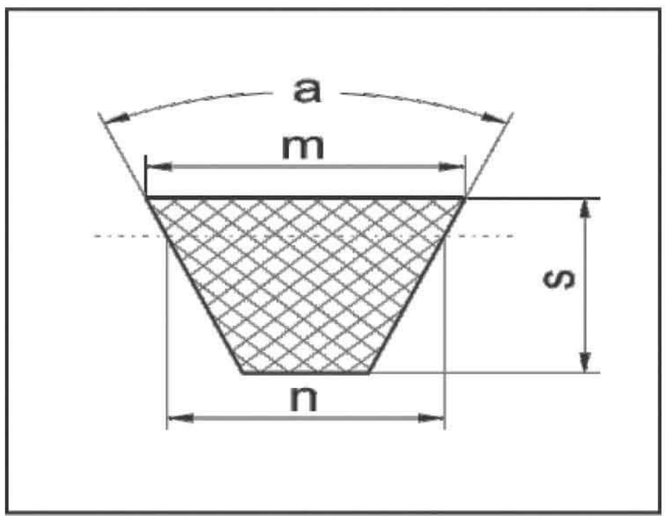


## 表2：皮带尺寸 Belt dimensions

| | m | s | n |
|---|---|---|---|
| SPZ | 9.7 | 8 | 8.5 |
| SPA | 12.7 | 10 | 11.0 |
| SPB | 16.3 | 13 | 14.0 |
| SPC | 22.0 | 18 | 19.0 |

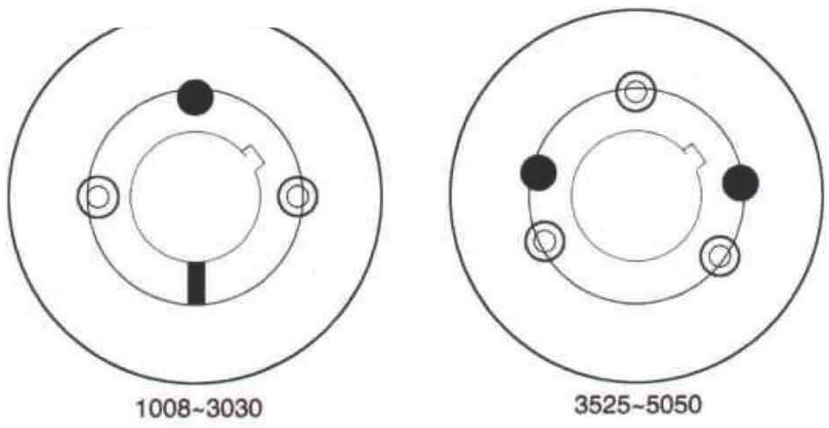


◎ 安装孔示意图
● 拆卸孔示意图

**所需工具:**

扭力扳手或内六角扳手
套筒扳手
塑料锤
螺丝刀

安装之前务必将零件上的 赃物、油漆、
油迹和润滑油等清理干净。

## 安装

将锥套嵌入皮带轮中并适度拧紧



锥套不要拧到最终的位置

将螺栓拧入到约三分之二处

插到轴上



锥套仍然不要拧得太紧

可以用螺丝刀进一步
拧紧螺栓以便于安装

拧紧螺栓



如用螺丝刀拧紧困难的话，可
使用扳手

用锤子轻轻敲击皮带轮的轮毂
逐渐交替地拧紧螺栓

在拆卸孔总放入少许润滑油

## 拆卸

卸下螺栓



卸下所有的螺栓并移走

从轴上松动锥套



在螺栓上加润滑油
将螺栓拧入拆卸孔中直至
锥套向处退出约5mm

如螺栓不易松动可用锤子
敲击皮带轮的轮毂

卸下锥套和皮带轮



用螺丝刀进一步拧紧螺栓
将其从轴上取下